Metric

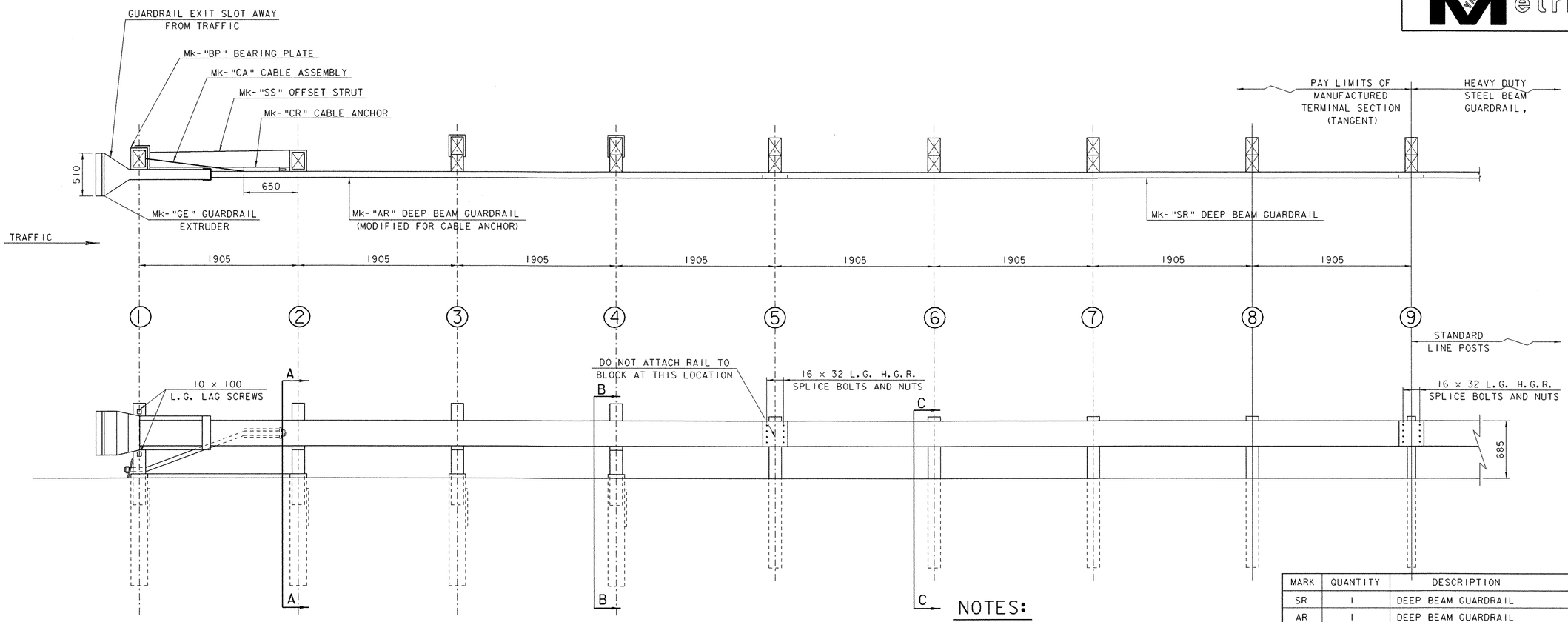

NOTES:

1. THE 16 DIA FLAT WASHER IS USED WITH THE NUT, BEHIND THE POST ONLY. NO WASHER IS USED AT THE RAIL.
2. THE BREAKAWAY POSTS AT LOCATIONS #5, 6, 7 AND 8 MAY BE AS SHOWN, OR FOUNDATION TUBES MAY BE USED AS SHOWN AT POST LOCATIONS #1, 2, 3, AND 4.
3. REFLECTORIZATION OF THE TERMINAL SHALL BE PROVIDED. ALL COSTS SHALL BE INCLUDED IN ITEM 621.505, "MANUFACTURED TERMINAL SECTION, (TANGENT)."

MARK	QUANTITY	DESCRIPTION
SR	1	DEEP BEAM GUARDRAIL
AR	1	DEEP BEAM GUARDRAIL
PS	1	PIPE SLEEVE
SP	4	SOIL PLATE
K	6	L.G. WOOD BLOCK
PG	4	WOOD POST
PA	4	WOOD POST
ST	4	L.G. STEEL TUBE
BP	1	BEARING PLATE
CR	1	CABLE ANCHOR BRACKET
CA	1	CABLE ASSEMBLY
SS	1	STRUT
GE	1	GUARDRAIL EXTRUDER
PE	1	WOOD POST
		HARDWARE
	4	16 x 250 HEX H.D. BOLT
	35	16 HEX NUT
	11	16 DIA. WASHER
	6	16 x 455 H.G.R. POST BOLT
	1	16 x 255 H.G.R. POST BOLT
	16	16 x 32 H.G.R. SPLICE BOLT
	8	16 x 190 HEX H.D. BOLT
	2	10 x 100 LAG SCREW
	2	25 HEX NUT
	2	25 WASHER

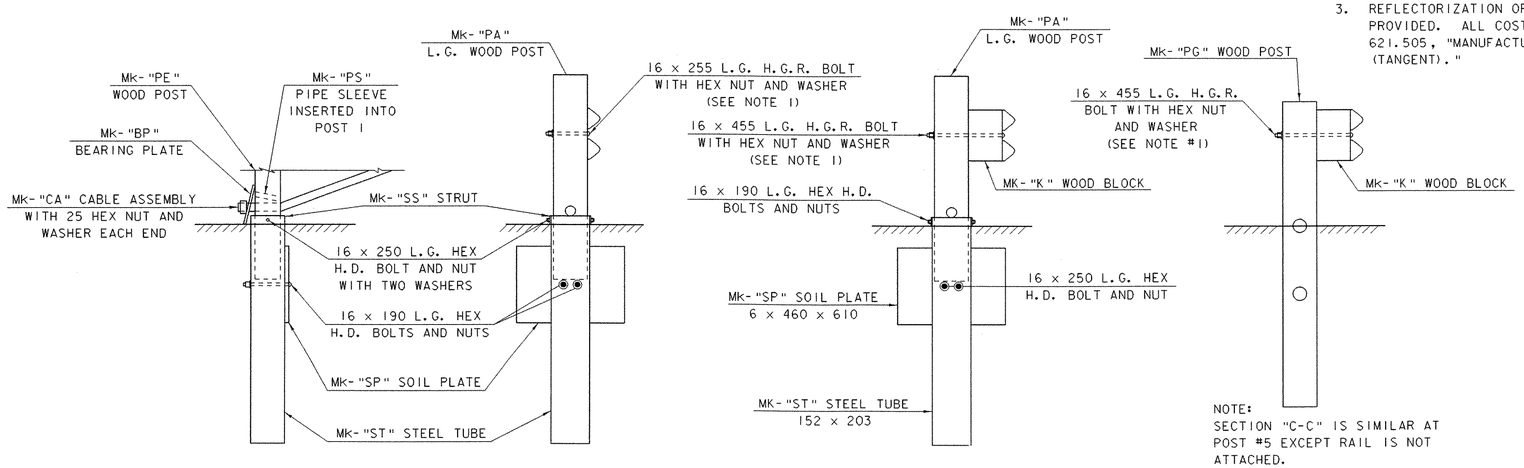

PARTIAL VIEW AT POST #1

SECTION "A-A" (POST #2)

SECTION "B-B" (POST #3 AND #4)

NOTE:
SECTION "C-C" IS SIMILAR AT POST #5 EXCEPT RAIL IS NOT ATTACHED.

SECTION "C-C" (POST #6, #7 AND #8)

SHEET NAME: **MANUFACTURED END TERMINAL**

PROJECT NAME: WESTFORD
PROJECT NUMBER: TH2 9436
HIGHWAY NO.: TH 4
BRIDGE NO.: 2
OVER: ROGERS BROOK

FILE NAME: 94j22\Structures\sj122sup.dgn
PROJECT MANAGER: R. R. WHITCOMB
DESIGNED BY: C. CARLSON
BRIDGE SHEET NUMBER:
PLOT DATE: 25-MAR-2005
DRAWN BY: J. GILMORE
IPARM NAME: sj122met.i
SHEET 43 OF 56