Metric

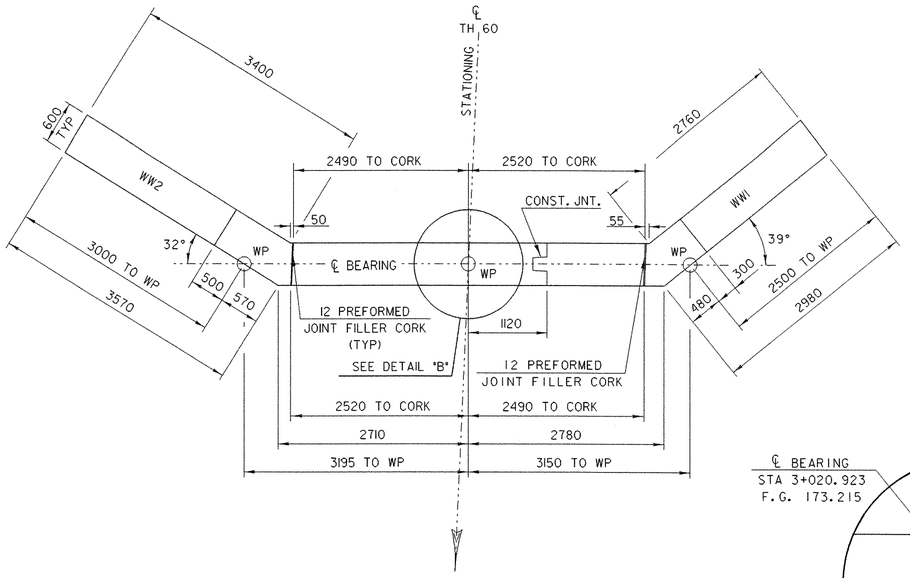

ABUTMENT #1 PLAN

SCALE: 1:40

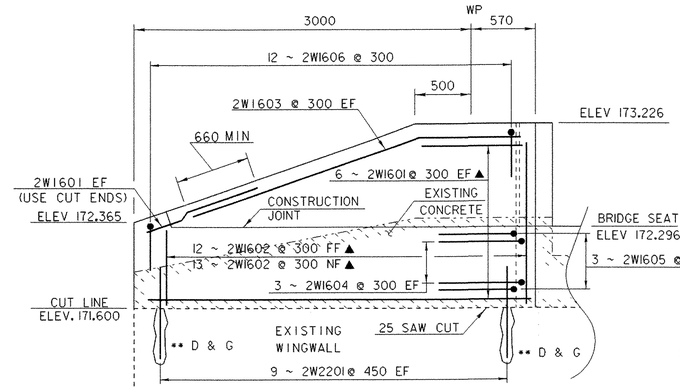

WINGWALL #2

SCALE: 1:25

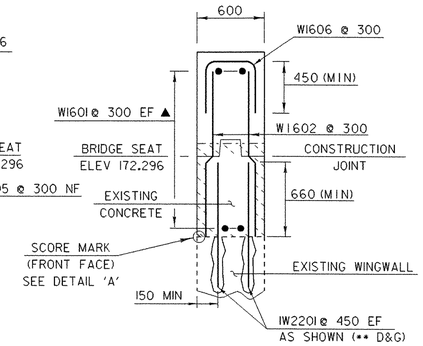

WINGWALLS 1 & 2 TYPICAL SECTION

SCALE: 1:25

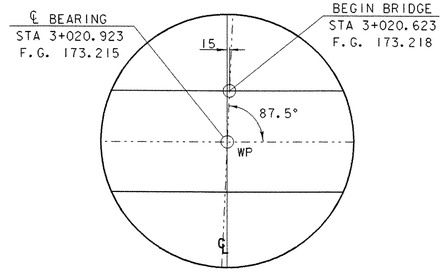

DETAIL "B"

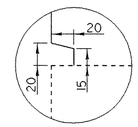

DETAIL 'A'

NTS

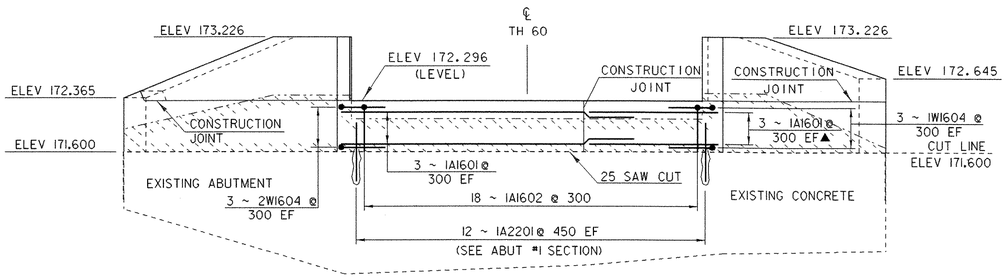

ABUTMENT #1 ELEVATION

SCALE: 1:40

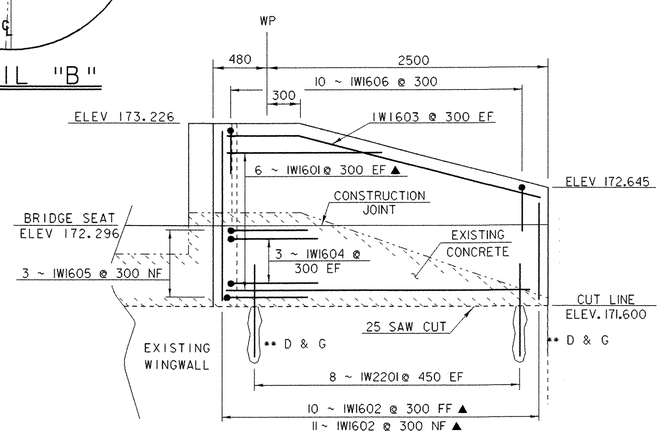

WINGWALL #1

SCALE: 1:25

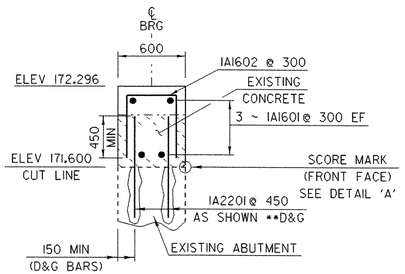

ABUTMENT #1 SECTION

SCALE: 1:25

NOTES:

1. NF = NEAR FACE
2. FF = FAR FACE
3. EF = EACH FACE
4. ▲ = CUT TO FIT IN FIELD
5. 80 CLEAR UNLESS OTHERWISE SPECIFIED ON THE PLANS
6. SEE SHEET 28 FOR CORNER DETAILS
7. ** D & G = DRILL AND GROUT REBAR MINIMUM 450 INTO EXISTING ABUTMENT
8. ALL LAPS 660 UNLESS NOTED OTHERWISE
9. SEE SHEET 3 FOR STRUCTURE EXCAVATION LIMITS FOR ABUTMENT #1
10. EXISTING CONCRETE TO BE REMOVED UNDER THE PAY ITEM "REMOVAL OF CONCRETE OR MASONRY"

SHEET NAME: ABUTMENT NUMBER 1 DETAILS	
PROJECT NAME: WALLINGFORD PROJECT NUMBER: BRO 1443(31)	HIGHWAY NO.: TH 60 BRIDGE NO.: 50 OVER: OTTER CREEK
FILE NAME: /PW/94J084/sj084sub.dgn PROJECT MANAGER: R. WHITCOMB DESIGNED BY: K. UPMAL BRIDGE SHEET NUMBER:	PLOT DATE: 24-OCT-2005 DRAWN BY: J. GILMORE IPARM NAME: sj084abl.i SHEET 26 OF 38