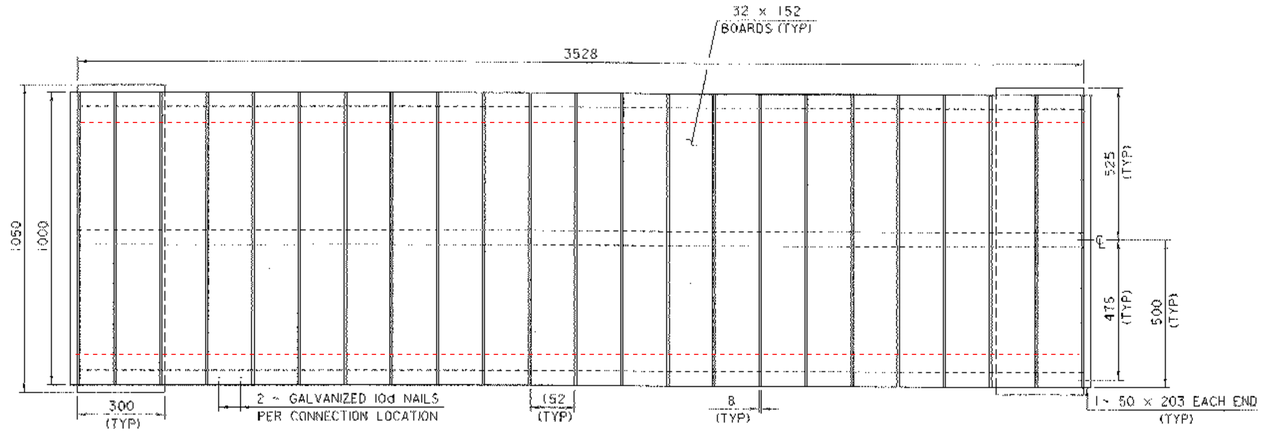

ACCESS RAMP PLAN

SCALE: 1:10

NOTES:

1. ALL REINFORCING STEEL HAS AN 80 CLEAR COVER.
2. CONTRACTOR MAY SUBSTITUTE 76 STAINLESS STEEL SCREWS IN PLACE OF NAILS.
3. SEE GENERAL NOTE #28 FOR ADDITIONAL INFORMATION.
4. ALL TIMBER SIZES ARE DEFINED AS NOMINAL.

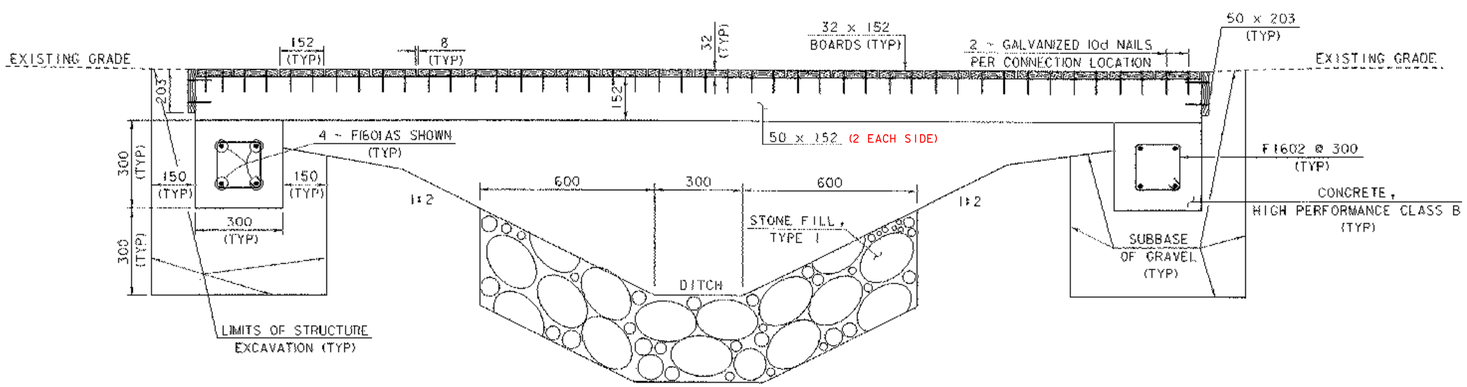

ACCESS RAMP ELEVATION

NTS

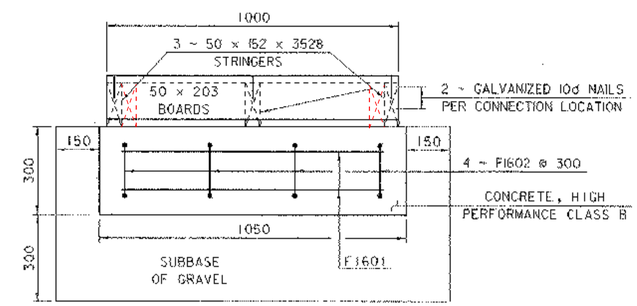

ACCESS RAMP END SECTION (TYP)

SCALE: 1:10

SHEET NAME:	ACCESS RAMP DETAILS		
PROJECT NAME:	WALLINGFORD	HIGHWAY NO.:	TH 60
PROJECT NUMBER:	BRO 1443(31)	BRIDGE NO.:	50
		OVER:	OTTER CREEK
FILE NAME:	/PW/94J084/sJ084ftb.dgn	PLOT DATE:	24-OCT-2005
PROJECT MANAGER:	R. WHITCOMB	DRAWN BY:	J. GILMORE
DESIGNED BY:	D. BONNEAU	IPARM NAME:	sJ084ftb.I
BRIDGE SHEET NUMBER:		SHEET	21 OF 38