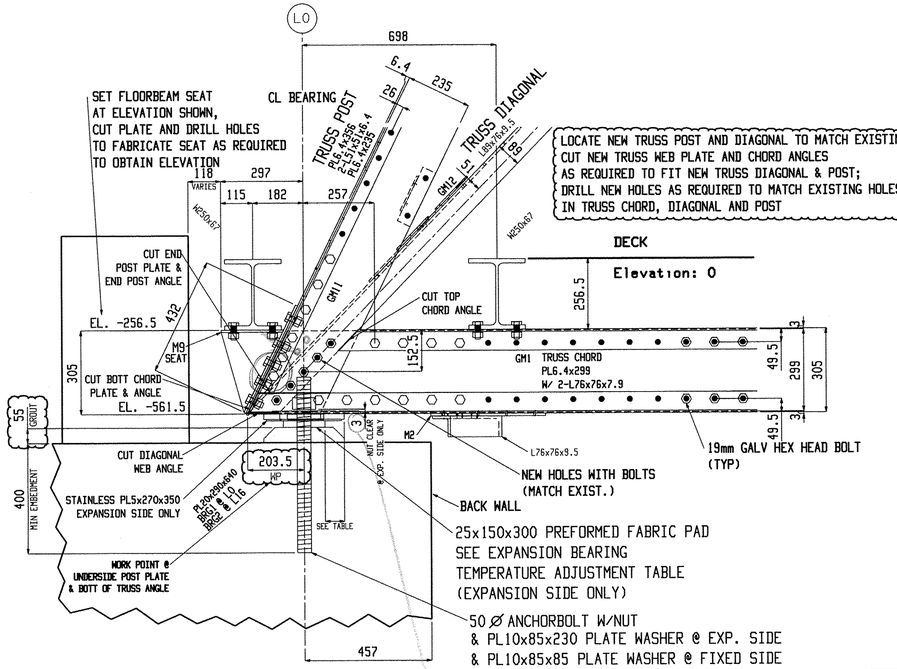

TRUSS_POST_BOTT_L0

(SIM L16)

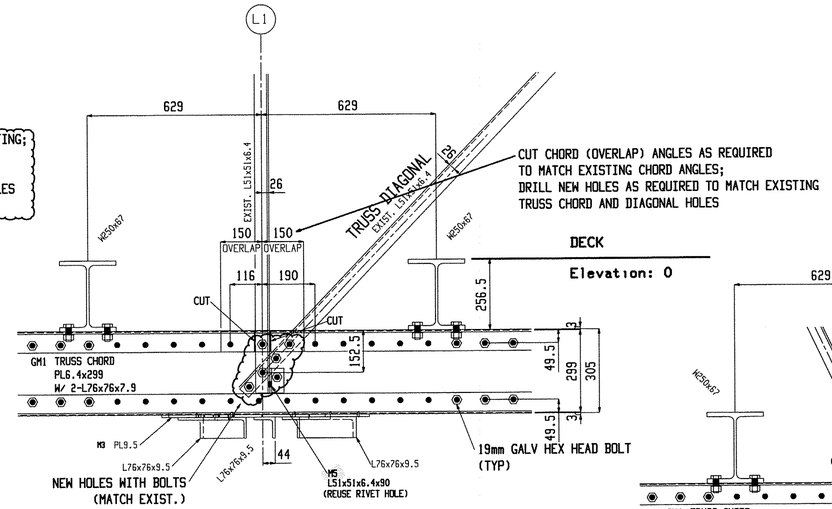

TRUSS_SPLICE_L1

(SIM L15)

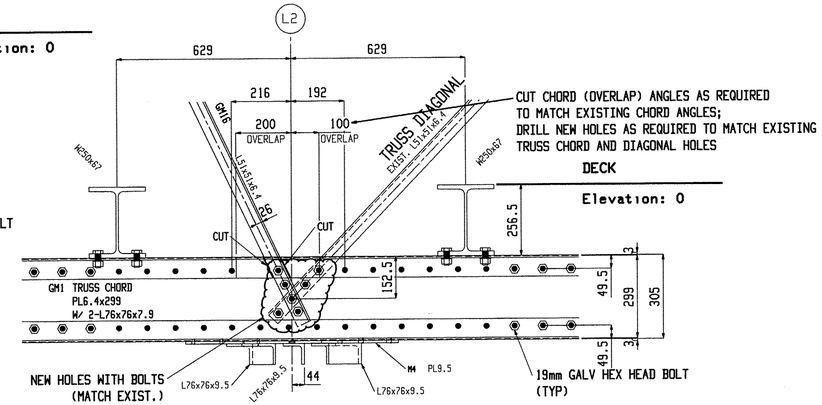

TRUSS_SPLICE_L2

(SIM L14)

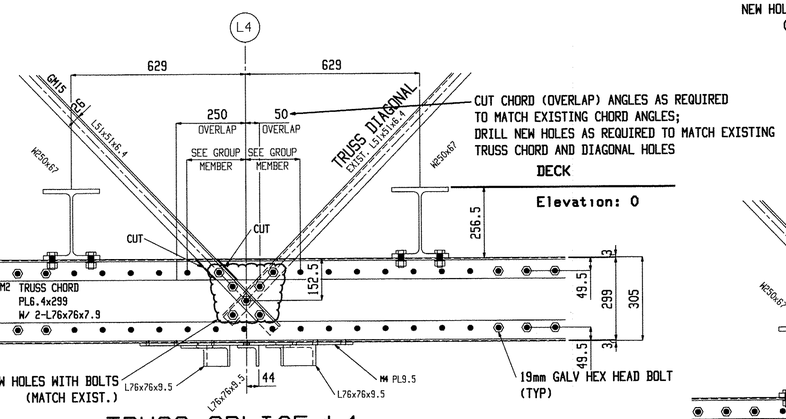

TRUSS_SPLICE_L4

(SIM L5,L7,L9,L11&L12)

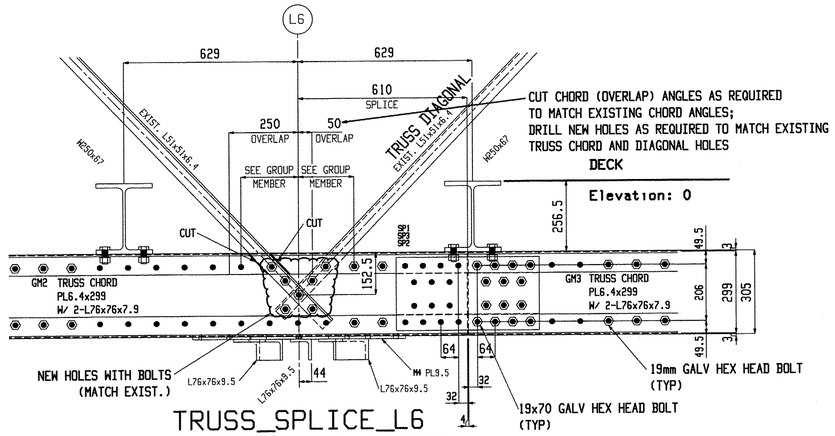

TRUSS_SPLICE_L6

(SIM L10)

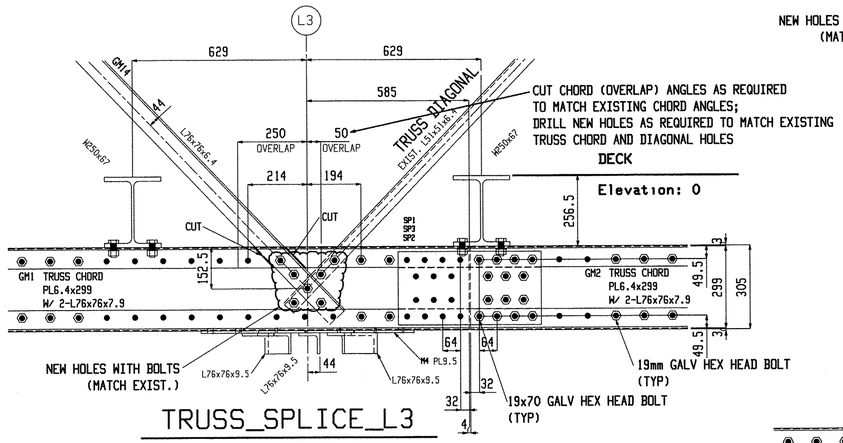

TRUSS_SPLICE_L3

(SIM L13)

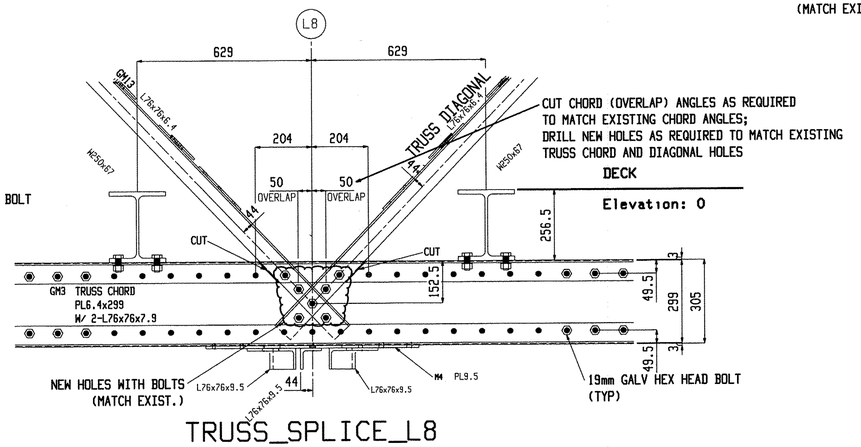

TRUSS_SPLICE_L8

RECEIVED
GK'D BY _____ OK'D BY _____
NOV 17 2009
REQUIRED _____ APPROVED As Noted
BY _____ DATE _____

Renaud Bros. Inc. 283 Fort Bridgeman Rd. #2 Vernon, VT. 05354 Phone 1-802 257-7383			Holes:	21mm UNO
			BOLTS:	19mm DIA. M164M-I GALV UNO
			Steel GR:	M270M-GR345 UNO
			Paint:	PER SPECS (GREEN) UNO
	Rev.No:	Date:	Surface Prep:	PER SPECS
Project: DUMMERSTON BRIDGE DUMMERSTON, VT	Date: 9-9-09		Job No. BHO 1442 (28)	
	DWN. BY: EG	Checked: MRS	Sheet No. E3	

Nov 06 2009 10:56:11 AM