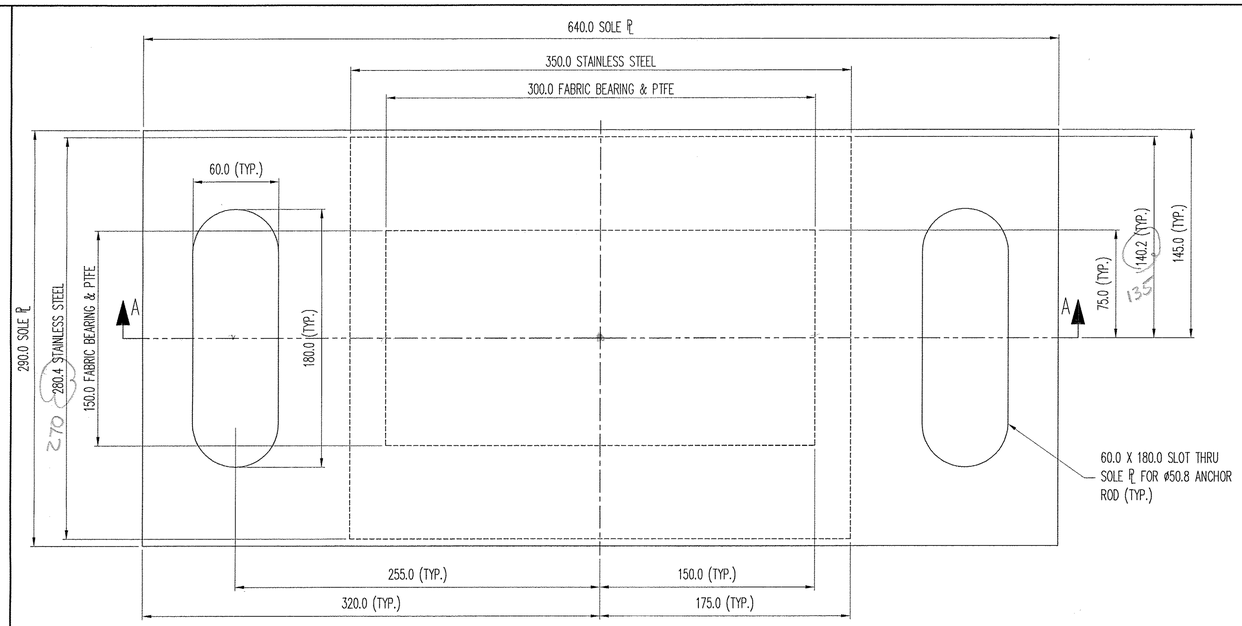

PLAN VIEW

PREFORM FABRIC BEARING
(2) REQ'D @ ABUT. 1

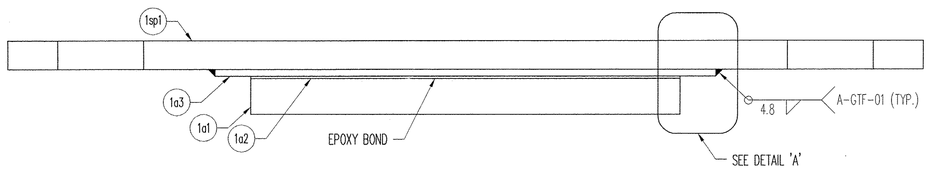

SECTION 'A-A'

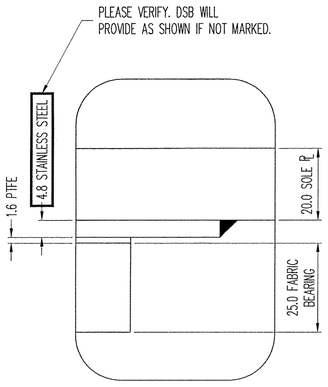

DETAIL 'A'

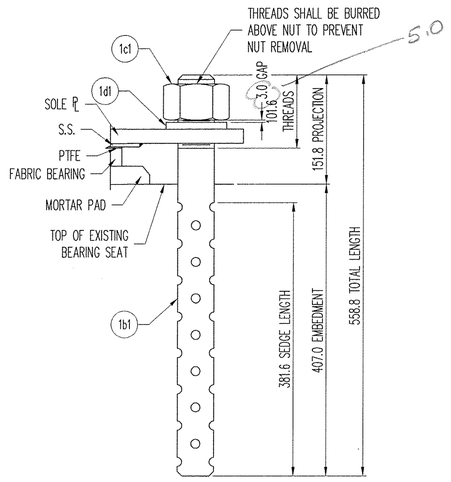

ANCHOR ROD DETAIL

MK	QTY	DESCRIPTION	MATERIAL	LENGTH	REMARKS	REV
1A	2	EXPANSION FABRIC BEARING				–
1a1	2	25.0 X 300.0	VT 731.01	150.0		–
1a2	2	1.6 X 300.0	PTFE	150.0	PURE VIRGIN UNFILLED	–
1a3	2	4.8 X 350.0	A240 T304, #8 & 2B	280.4 270	PLAIN	–
1sp1	2	20.0 X 640.0	A709 GR 250 OR 345	290.0	~~PAINT~~	–
1B	4	SWEDGED ROD				–
1b1	4	Ø50.8 X 558.8 SWEDGED ROD	F1554 GR 250		101.6 THREADS, 381.6 SWEDGE; A153-HDG	–
1C	4	HEAVY HEX NUT				–
1c1	4	Ø50.8 HEX NUT	A563-DH OR A194-2H		A153-HDG	–
1D	4	WASHER PLATE				–
1d1	4	9.5 X 85.7	~~A36~~ AASHTO M270M/M270 GR250	228.6	52.4 DIA HOLE CENTERED; A123-HDG	–
					11/9/2009 5:43:56 AM	

OK

PLEASE VERIFY. DSB WILL PROVIDE AS SHOWN IF NOT MARKED.

LOAD TABLE	
LIVE LOAD (KN)	89.0
DEAD LOAD (KN)	222.0

RECEIVED
CK'D BY _____ CK'D BY MEM
NOV 17 2009
REVIEWED _____ APPROVED AS NOTED
BY _____ DATE 12/31/09

SEE SHT. GN1 FOR GENERAL NOTES & COATING LIMITS.

REV.	DESCRIPTION	DATE	DET.	CKD.

D.S. BROWN

THE D.S. BROWN COMPANY
300 E. CHERRY STREET
NORTH BALTIMORE, OHIO 45872
419.257.3561
FAX: 419.257.0332
WWW.DSBROWN.COM

LOCATION — TH 62 OVER WEST RIVER
BRIDGE — 37
PROJECT — BHO 1442 (28)
PROJECT — DUMMERSTON
—
DESIGNER — VANASSE HANGEN BRUSTLIN, INC.
CUSTOMER — RENAUD BROTHERS

ITEM	QUANTITY
27177-1106-1	2 OF 2
–	–
–	–
–	–
–	–
–	–
–	–
–	–
–	–

DESCRIPTION: PREFORMED FABRIC PAD
WINDHAM CO., VT

SCALE:	DRAWN BY:	CHECKED BY:	DATE:	
N.T.S.	DA	DAE	11/3/09	–
PROJECT NUMBER	PRODUCT CODE	RELEASE	SHEET	
27177	1106	1	01	