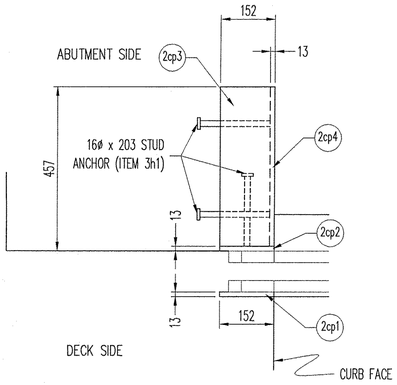

COVER PLATE PLAN VIEW

TH 62 OVER WEST RIVER
(BRIDGE NO. 37)
ABUTMENT 1 (LOOKING DOWNSTATION)
ABUTMENT 2 (LOOKING UPSTATION)

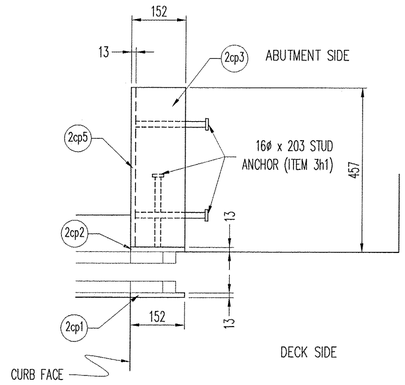

COVER PLATE PLAN VIEW

TH 62 OVER WEST RIVER
(BRIDGE NO. 37)
ABUTMENT 1 (LOOKING DOWNSTATION)
ABUTMENT 2 (LOOKING UPSTATION)

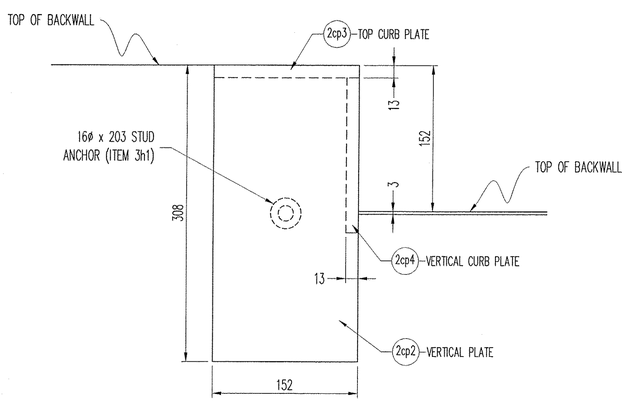

COVER PLATE PROFILE

ABUTMENT SIDE

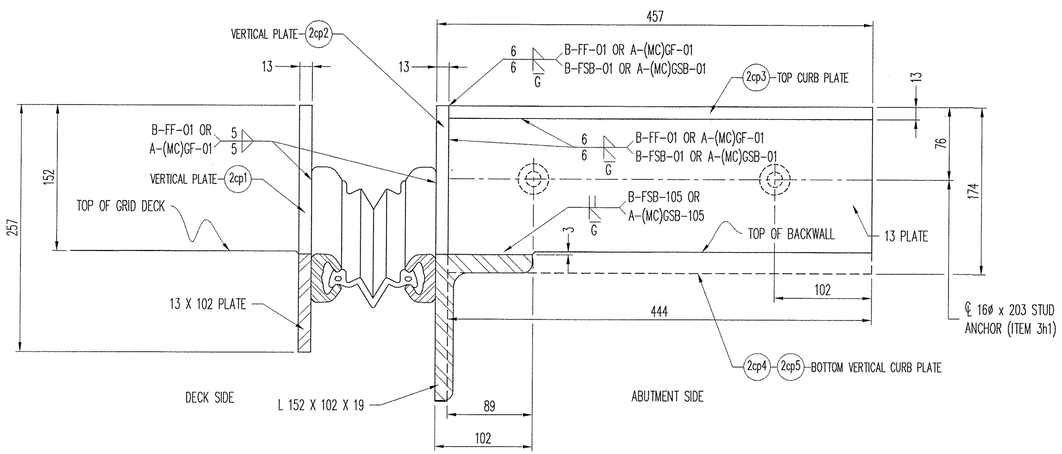

COVER PLATE ELEVATION

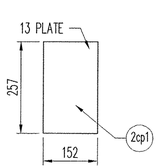

VERTICAL PLATE

ITEM NO. 2cp1
(4) REQ'D
ATTACH TO UPTURN ON DECK SIDE

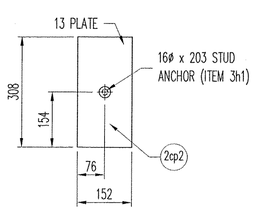

VERTICAL PLATE

ITEM NO. 2cp2
(4) REQ'D
ATTACH TO UPTURN ON ABUTMENT SIDE

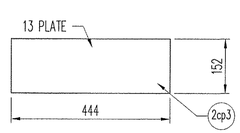

TOP CURB PLATE

ITEM NO. 2cp3
(4) REQ'D

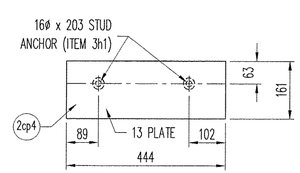

VERTICAL CURB PLATE

ITEM NO. 2cp4
(2) REQ'D

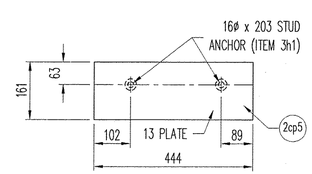

VERTICAL CURB PLATE

ITEM NO. 2cp5
(2) REQ'D

RECEIVED
NOV 17 2009
RESUBMIT ____ APPROVED ✓
BY ____ DATE 12/31/09

REV.	DESCRIPTION	DATE	DET.	CKD.

D.S. BROWN
THE D.S. BROWN COMPANY
300 E. CHERRY STREET
NORTH BALTIMORE, OHIO 45872
419.257.3561
FAX: 419.257.0332
WWW.DSBROWN.COM

LOCATION — TH 62 OVER WEST RIVER
BRIDGE — 37
PROJECT NO. — BHO 1442 (28)
—
—
DESIGNER — VANASSE HANGEN BRUSTLIN, INC.
CUSTOMER — RENAUD BROTHERS

ITEM	QUANTITY

DESCRIPTION: COVER PLATE DETIALS
WINDHAM COUNTY, VERMONT

SCALE:	DRAWN BY:	CHECKED BY:	DATE:	SHEET
N.T.S.	MJS	DAE	11/05/09	2 OF 3

PROJECT NUMBER	PRODUCT CODE	RELEASE	SHEET
27177	1011	–	2