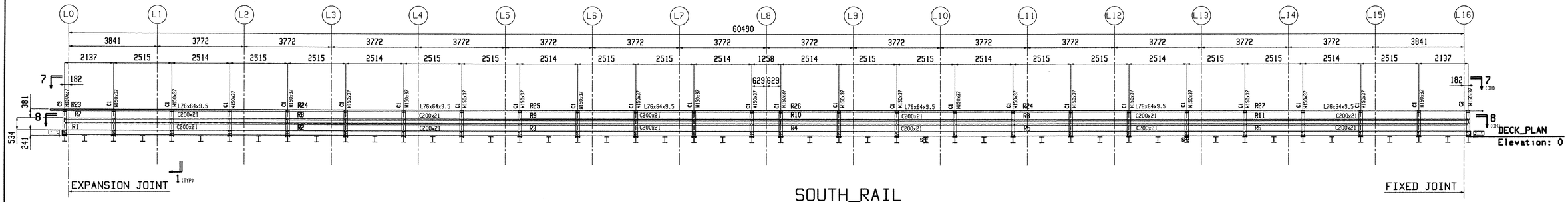

SOUTH_RAIL

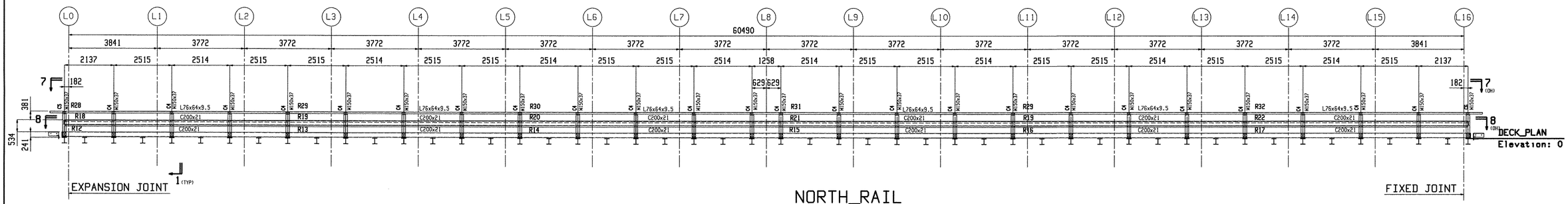

NORTH_RAIL

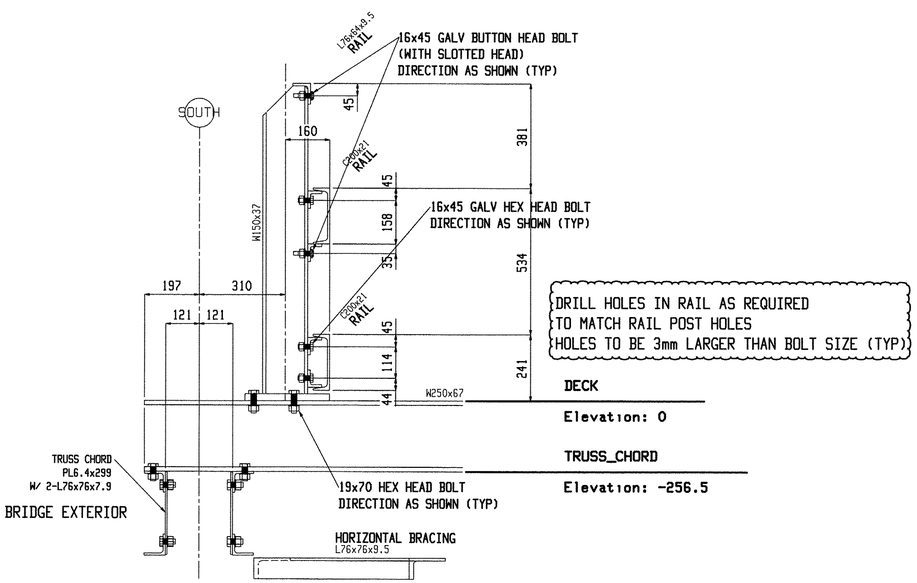

SECTION_1

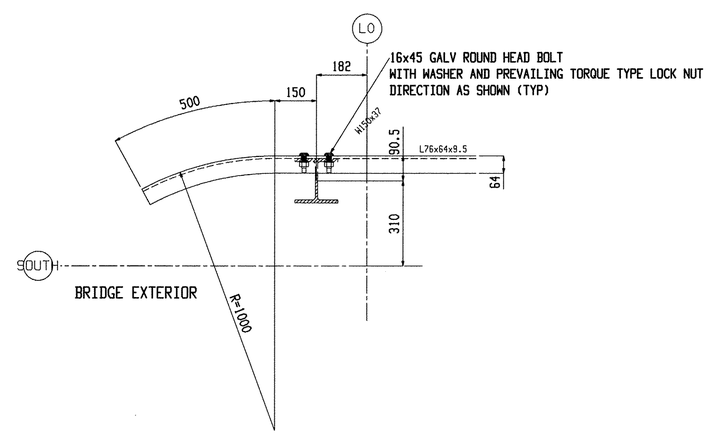

SECTION_7

Elevation: 1156 (U.N.)

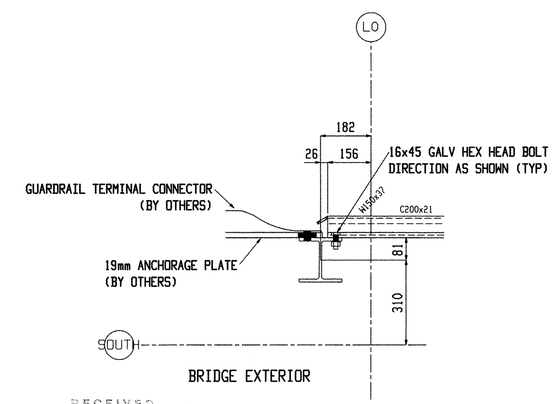

SECTION_8

Elevation: 775 (U.N.)

RECEIVED
CKT BY ORDER BY
APR 0 1 2010
RESUBMIT APPROVED
BY DATE 4/23/10

Casco Bay Steel Structures 75 Spring Hill Rd Saco, ME, 04072 207-282-7360			Holes: 21mm UNO
			BOLTS: 19mm DIA. M164M-I GALV UNO
			Steel GR: M270M-GR345 UNO
	1 APPR.	3-17-10	Paint: PER SPECS (GREEN) UNO
	Rev.No:	Date:	Surface Prep: PER SPECS
Project: DUMMERSTON RAILS DUMMERSTON, VT	Date: 9-9-09		Job No. BHO 1442 (28)
	DWN. BY: EG	Checked: MRS	Sheet No. E6

Mar 18 2010 03:42:37 PM