Metric

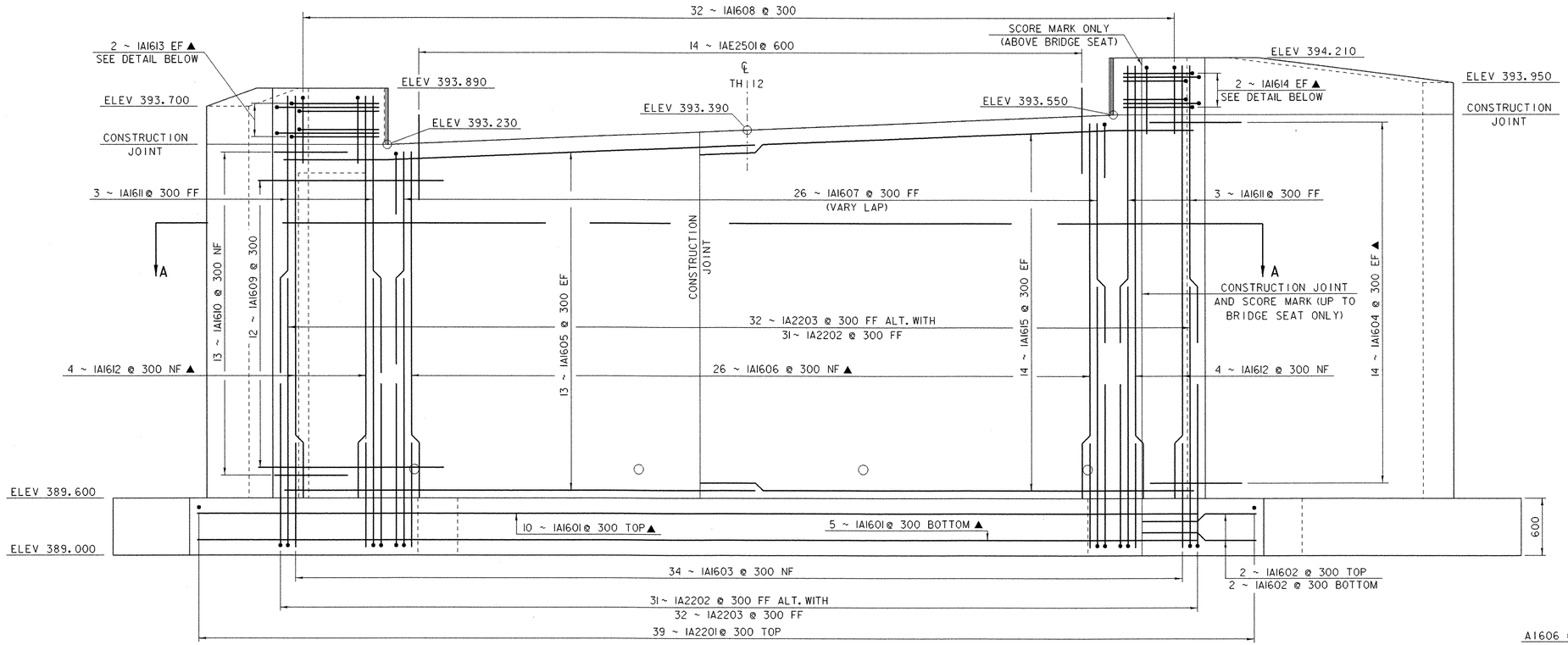

ABUTMENT #1 ELEVATION

SCALE: 1:25

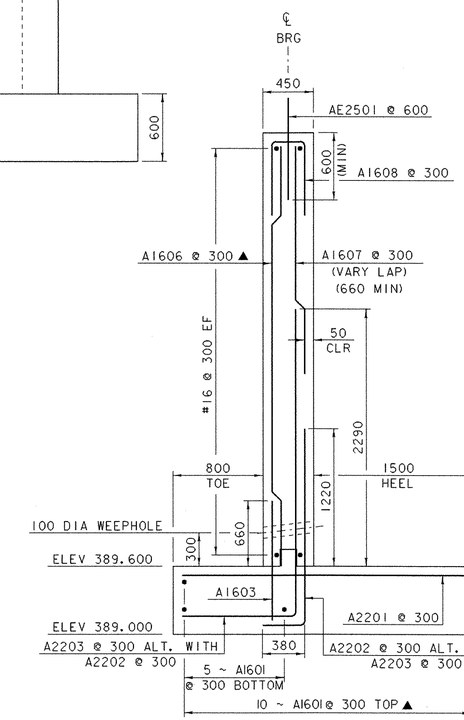

ABUTMENT #1 SECTION

SCALE: 1:25

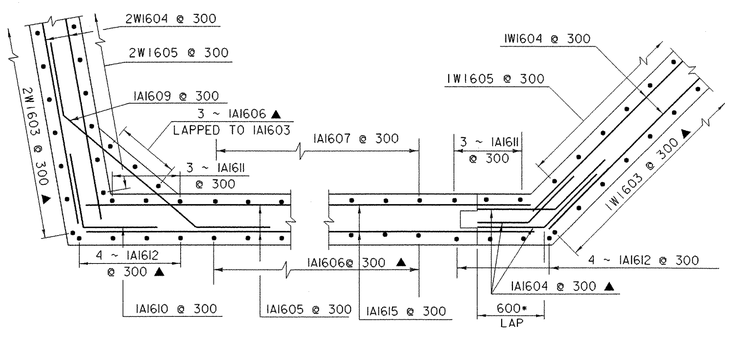

CORNER DETAILS BELOW BRIDGE SEAT

SCALE: 1:25

SECTION A- A

* 600 LAP THIS CONSTRUCTION JOINT ONLY

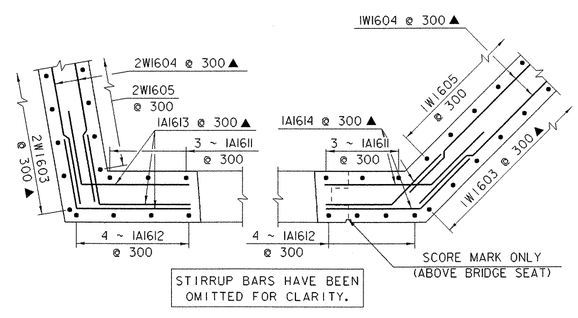

STIRRUP BARS HAVE BEEN OMITTED FOR CLARITY.

CORNER DETAILS ABOVE BRIDGE SEAT

SCALE: 1:25

NOTES

1. NF = NEAR FACE
2. FF = FAR FACE
3. EF = EACH FACE
4. ▲ = CUT TO FIT IN FIELD
5. 80 CLEAR UNLESS OTHERWISE SPECIFIED ON THE PLANS
6. ALL LAPS NOT DETAILED SHALL BE 660 (MIN)
7. 3000 MAX. WEEPHOLE SPACING

SHEET NAME: **ABUTMENT #1 ELEVATION**	
PROJECT NAME: STAMFORD PROJECT NUMBER: TH3 9411	HIGHWAY NO.: TH 12 BRIDGE NO.: 14 OVER: LESURE BROOK
FILE NAME: /strl/94j072/sj072sub.dgn PROJECT MANAGER: G.S. ROGERS DESIGNED BY: C. MEUNIER BRIDGE SHEET NUMBER:	PLOT DATE: 16-OCT-2003 DRAWN BY: J. GILMORE IPARM NAME: sj072evl.i SHEET 24 OF 38