STRUCTURAL STEEL 82

ABM INFO PAGE	LINE	SHIP MARK	QTY	MARK	BILL OF MATERIAL MATERIAL	LENGTH m	LENGTH mm	REMARKS	WT	PROCUREMENT NOTES
					DIAPHRAGMS					
2	G	5D1	15		W 760x134	1	880		252 kg 555 lbs	
		5M1	20		UTILITY SUPPORTS			HOT-DIPPED GALV	66 kg 145 lbs	
2	K		20	a5	W 200x36	1	052			
2	L		20	c5	L 76x76x6.5	1	184			
2	M		20	pa5	PL 13x130	0	180			
2	N		20	pb5	PL 13x180	0	455			
2	P		20	pc5	PL 13x254	0	254			
2	Q		20	pd5	PL 13x130	0	140			

JOB NO. 445 | DRAWING NO. 5 | REV. 1

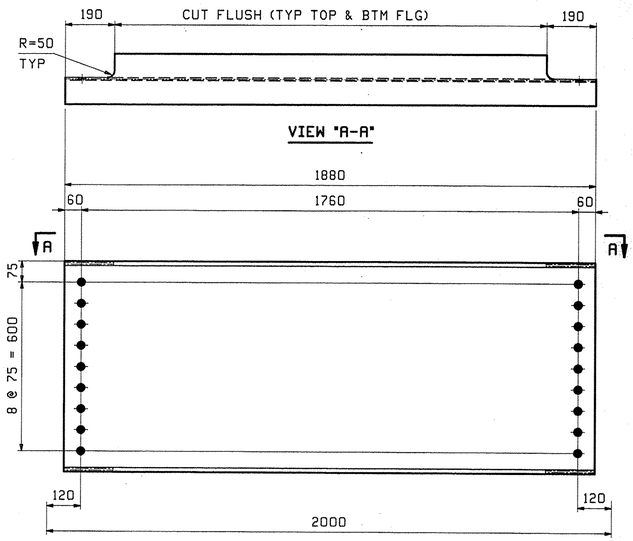

15 ~ DIAPHRAGMS - 5D1

LOOKING BACK-STATION

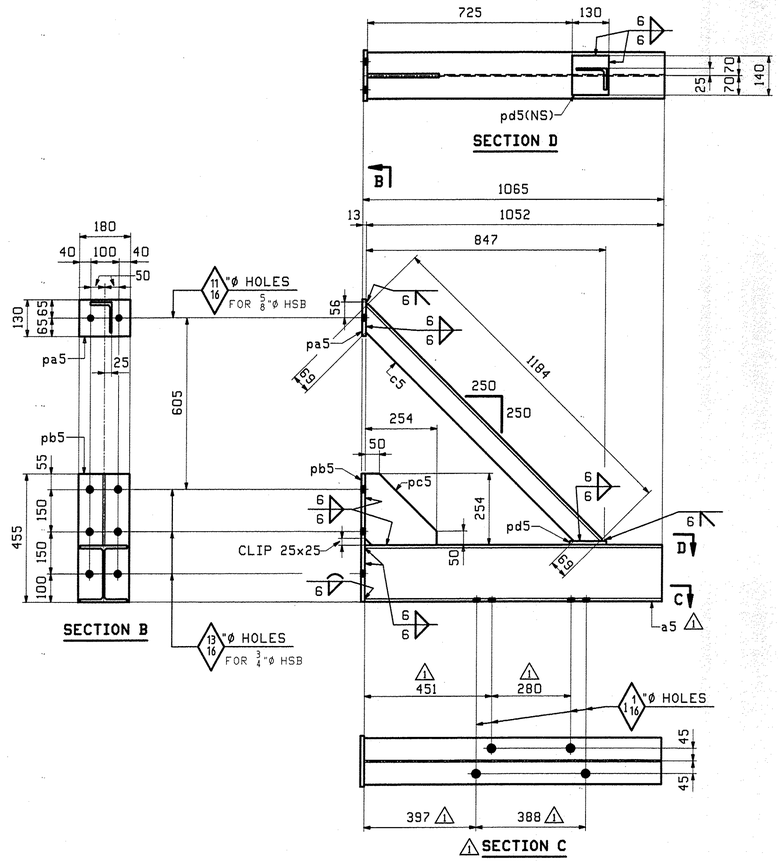

HOT DIPPED GALVANIZED
AFTER FABRICATION

20 ~ UTILITY SUPPORTS - 5M1

ALONG LINE 1 (WATER MAIN)
ALONG LINE 4 (SEWER MAIN)

NOTE:
FOR GENERAL NOTES SEE DRAWING GN1.

REV.	DATE	REMARKS	DWN	CHK	APVL	SHOP
1	6/23	REV. UTILITY SUPPORT	JTB	SF	6/24/10	
0					4/16/10	

MATERIAL:	SURFACE PREP. & PAINT:	HOLES:	SHOP BOLTS:
M270M-345W	SEE DWG GN1	15/16"ø (UN)	NONE

DESCRIPTION: DIAPHRAGMS & UTILITY SUPPORTS

CASCO BAY STEEL STRUCTURES, INC.
75 SPRING HILL ROAD SACO, MAINE 04072
PHONE (207) 282-7360 FAX. (207) 282-1179
TENSOR 2980

STRUCTURE:	BRIDGE NO. 31 ON TOWN HIGHWAY NO. 3 BRIDGE PROJECT READSBORO County of BENNINGTON	DRAWN: JTB	DATE: 03/24
		CHKD: ELC	DATE: 4/14/10
LOCATION:	TOWN OF READSBORO, VERMONT	JOB NO.	DWG NO.
PROJ NO.	BRO 1441(25)	445	5
CUSTOMER:	COLD RIVER BRIDGE LLC		REV. 1

RECEIVED
CK'D BY ___ OK'D BY DDB
JUN 28 2010
RESUBMIT ___ APPROVED ✓
BY CPW DATE 7/1/10

Wed, Jun 23, 2010 03:03:18 PM /users/jake/2980/5 : Rev1