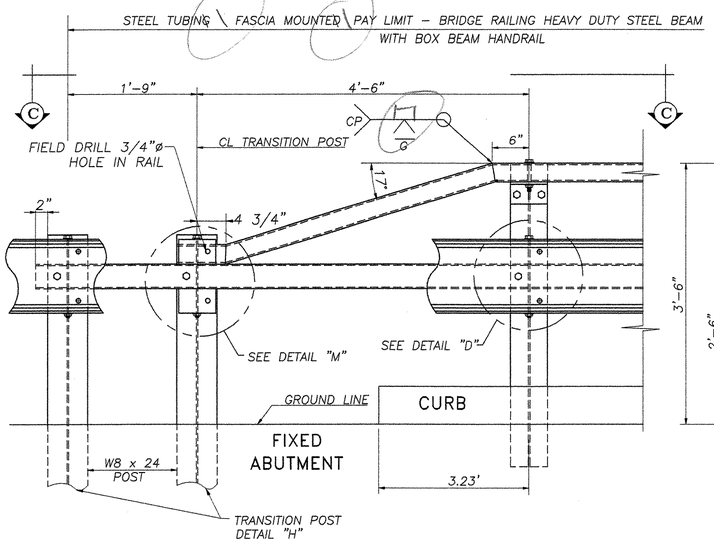

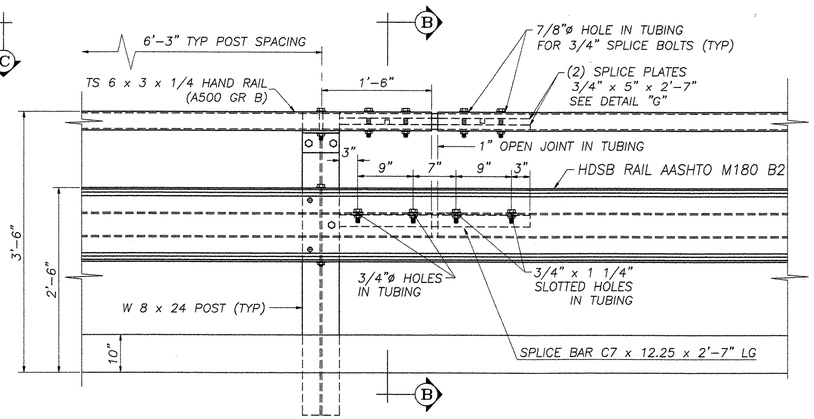

RAILING ELEVATION VIEW

(SHOWN LOOKING (N) FROM ℄ OF ROADWAY)

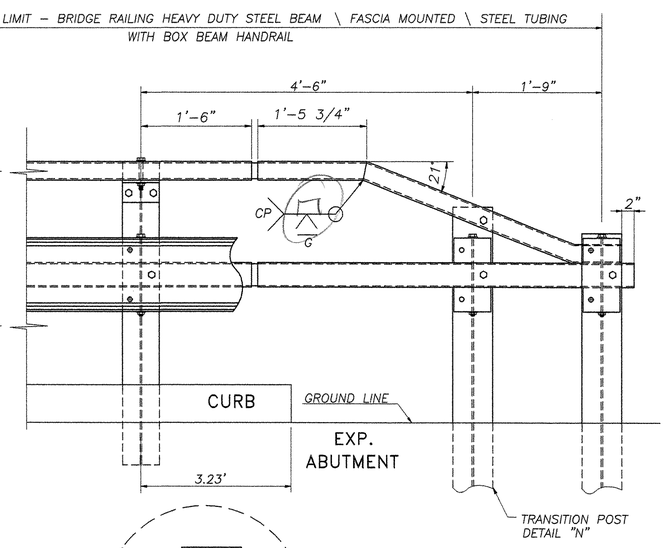

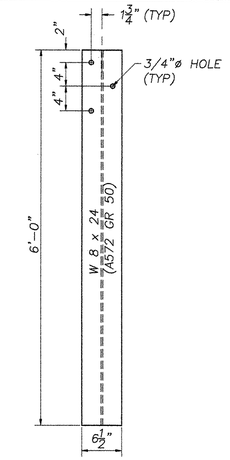

DETAIL "H"
TRANSITION POST
W8x24 (A572 GR 50)

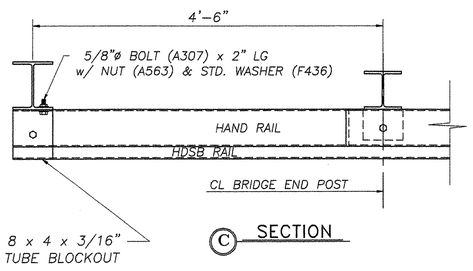

C SECTION

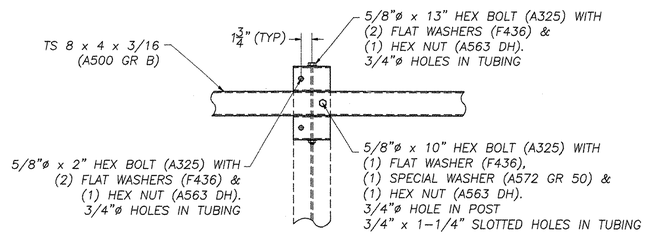

DETAIL "D"

STEEL BEAM GUARD RAIL NOT SHOWN

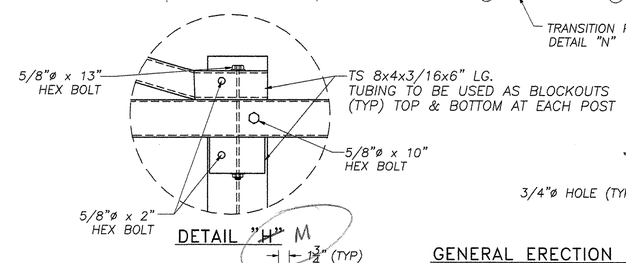

DETAIL "H" M

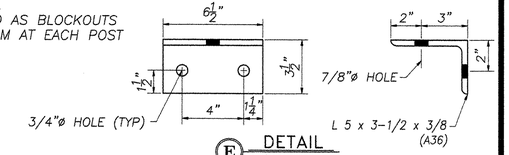

E DETAIL

SHELF BRACKET

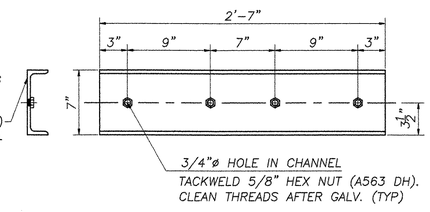

SPLICE BAR DETAIL

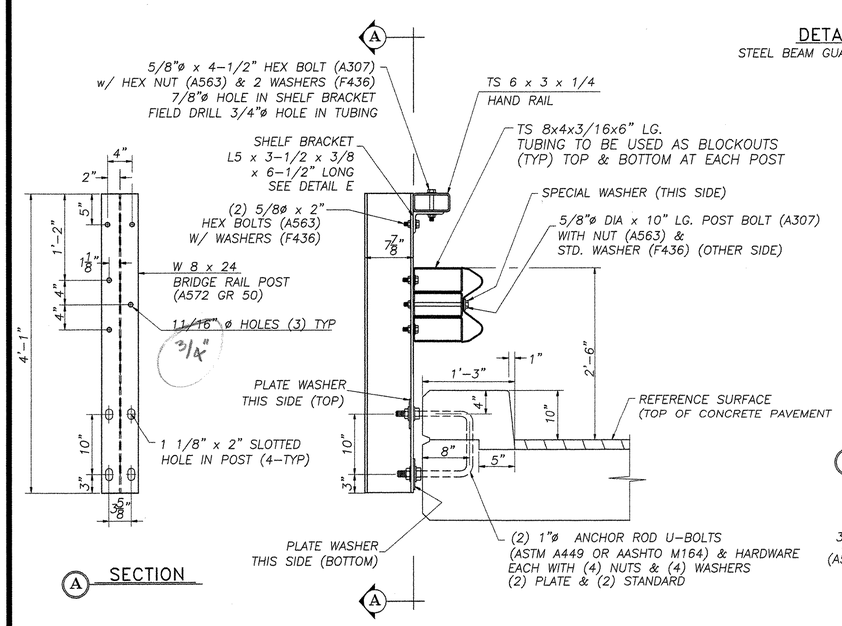

A SECTION

FASCIA MOUNTED POST WITH CURB

W 8 x 24 (A572 GR 50)

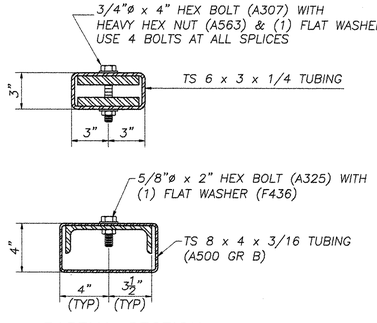

B PARTIAL SECTION

SHOWING HAND RAIL TUBE, BRIDGE RAIL TUBE & SPLICE BARS

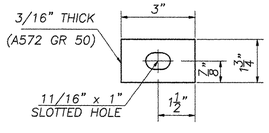

SPECIAL WASHER DETAIL

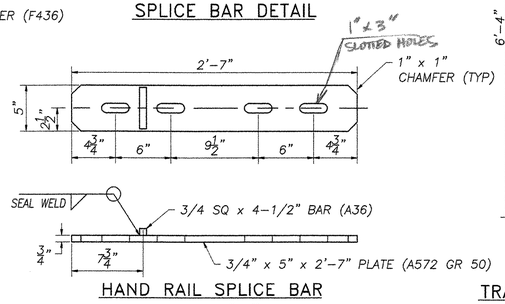

HAND RAIL SPLICE BAR

DETAIL "G"

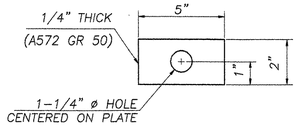

PLATE WASHER DETAIL

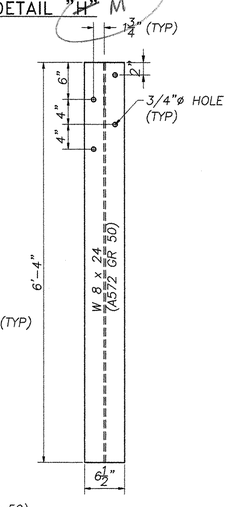

DETAIL "N"
TRANSITION POST
W8x24 (A572 GR 50)

GENERAL ERECTION NOTES

1. Heavy duty steel beam guard rail shall conform to VT. specification 732. AASHTO M180 B2
2. Structural steel tubing shall conform to VT. specification 732. ASTM A500 gr B
3. Anchor bolts, nuts and washers shall be galvanized in accordance with AASHTO M 232 and shall conform to VT. specification 714 unless otherwise noted.
4. Bridge rail posts, special washers, splice bars and plate washers shall conform to AASHTO M 223 / M 223M and shall be galvanized after fabrication in accordance with AASHTO M 111. Prior to galvanizing all corners and edges of steel plates, shapes, etc., shall be ground to a 1/16" radius.
5. See standard drawing G–1 and G–1d for additional details concerning guard rail.
6. See standard drawing SB–R6–82 for approach rail details and for information relative to schedule I and schedule II. All approach rail shall be heavy duty steel beam guard rail. Also see Std. Dwg. SB–R6–82 for handrail details (except end details) if hand rail is required.
7. All posts shall be set normal to grade.
8. Splices for the steel beam guard rail shall lap in the direction of traffic.
9. See Standard drawing G–1 for details of delineators. A delineator shall be located at every fifth post. Payment shall be subsidiary to other items.
10. A railing joint splice shall be provided at each superstructure expansion joint.
11. All field cut or drilled areas shall be coated with zinc rich paint.
12. For radii less than 950 feet, the steel tubing shall be shop bent to fit the applicable curve.
13. The drop–weight tear test in section 732 shall not apply to the structural tubing on this standard.
14. All bolts and related hardware shall conform to AASHTO M164 type 1 bolts, hot dipped or mechanically galvanized per specification.

REVISIONS

No.	Remarks	Date
0	Initial submittal	1/20/04
	2ND SUBMITTAL	2/4/04

RECEIVED
CK'D BY G.Ray CK'D BY _____
2-17-04
FEB 11 2004
RESUBMIT _____ APPROVED AS NOTED
BY RRW DATE 2-17-04

HIGHWAY SAFETY CORP.
GLASTONBURY, CT

ITEM 525.43 STEEL BRIDGE RAIL – HDSB W/HANDRAIL
TOWN OF SHELBURNE, CHETTENDEN COUNTY
BOSTWICK ROAD OVER VERMONT ROAD
BRIDGE No. 15
BHO 1445 (30)

GENERAL CONTRACTOR
SUB CONTRACTOR F.R. LAFAYETTE, INC.

DRAWN	J. Ruiz
CHECKED	
DATE	1/19/04
SCALE	NONE
HSC REFERENCE NO.	1412
SIZE	D
REVISION	0
SHEET NO.	2 of 2