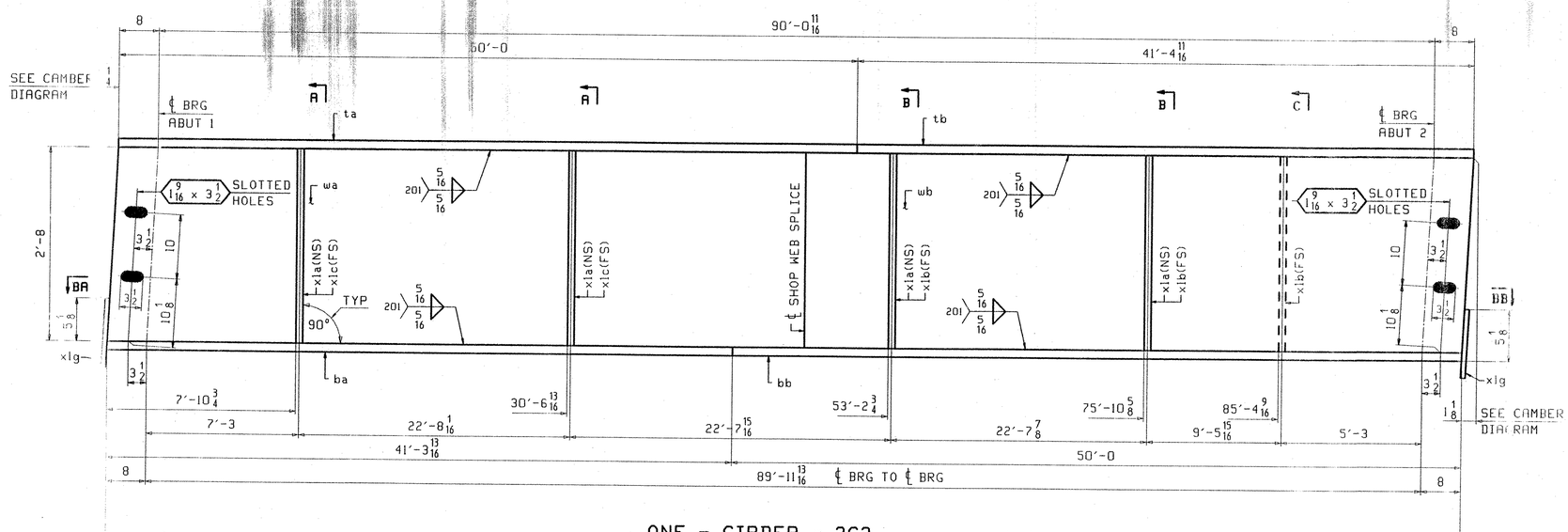

ONE - GIRDER - 2G2

FOR GIRDER STANDARD DETAILS SEE DRAWING X1.
FOR CAMBER DIAGRAM SEE DRAWING C1.
FOR GENERAL NOTES SEE DRAWING GN1.
H2-3 DENOTES MATERIAL SUBJECT TO CHARPY V-NOTCH TESTING.

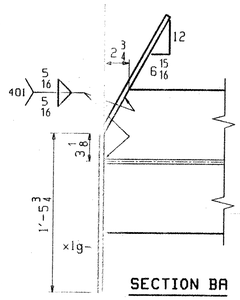

SECTION BA

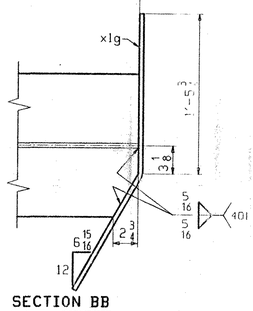

SECTION BB

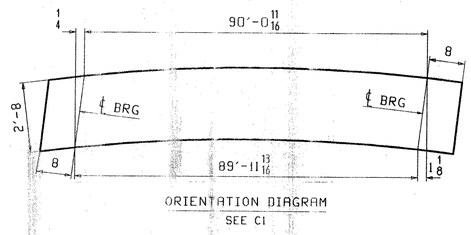

ORIENTATION DIAGRAM
SEE C1

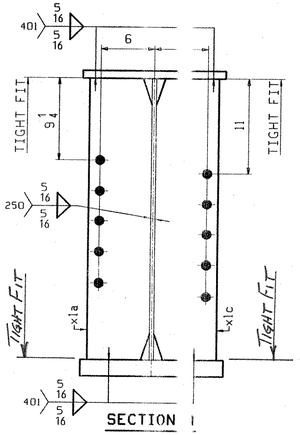

SECTION A

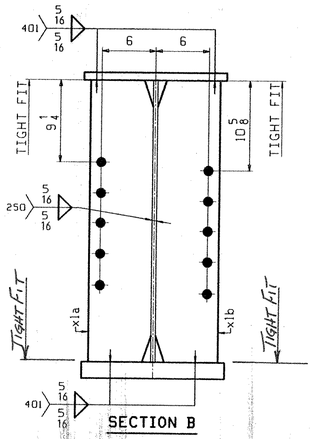

SECTION B

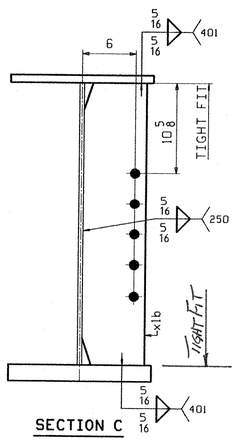

SECTION C

ABM INFO		SHIP	BILL OF MATERIAL					JOB NO.	DRAWING NO. 2	REV.
PAGE	LINE	MARK	QTY	MARK	MATERIAL	LENGTH FT	LENGTH INCHES	REMARKS	WT	PROCUREMENT NOTES
		2G2	1		GIRDER				19247	
1	J		1	wa	PL 1/2 x 33 1/2	45	8 1/2	(M270-50WT2) (H2-3)		
1	J		1	wb	PL 1/2 x 33 5/8	45	9	(M270-50WT2) (H2-3)		
1	E		1	ta	PL 7/8 x 16	50	0			
1	G		1	tb	PL 7/8 x 16	41	4 11/16			
1	C		1	ba	PL 1 7/8 x 16	41	3 13/16	(A709-50WT2) (H2-3)		
1	A		1	bb	PL 1 7/8 x 16	50	0	(A709-50WT2) (H2-3)		
2	B		4	x1a	PL 1/2 x 7 1/2	2	8			
2	B		2	x1c	PL 1/2 x 7 1/2	2	8			
2	B		3	x1b	PL 1/2 x 7 1/2	2	8			
2	D		2	x1g	PL 1/4 x 9	2	8 7/8	BENT		

REV.	REMARKS	DATE	DWN	CHK	APP	Q.A.	NO.	DIA.	LGT	TYPE	WASHER
	OUT FOR APPROVAL	12 1-03									
	OUT FOR APPROVAL										
	ISSUED TO SHOP										
	FIELD & OFFICE										

MATERIAL: A709-50W (UN)
ELECTRODES:
HOLES: 15/16-Ø (UN)
SHOP BOLTS: NONE
SURFACE PREP. & PAINT: NONE

RECEIVED
OK'D BY ____ OK'D BY ____
DEC 09 2003
RESUBMIT ____ APPROVED As Noted
BY RAW DATE 1-8-04

DESCRIPTION: GIRDER - 2G2
JOB: BOSTWICK ROAD OVER VERMONT RAILWAY
BRIDGE NO. 15 HIGHWAY NO. TH 3
TOWN OF SHELBURNE
ENGR: McFarland-Johnson, INC.
CONTRACTOR: S.D. IRELAND BROS. CORP.
PROJ NO. BRG 1445(30)
CUSTOMER: VERMONT AGENCY OF TRANSPORTATION

	DATE
DRAWN BY JTB	11/14
CHKD BY	
FTM	11/21/03
APPROV BY	
SUPERVISOR W. J. GATTI	
Q.A.	

CASCO BAY STEEL STRUCTURES, INC.
75 SPRING HILL ROAD SACO, MAINE 04072
PHONE (207) 282-7360 FAX. (207) 282-1179

JOB NO. 209 DRG. NO. 2 REV. △

12755