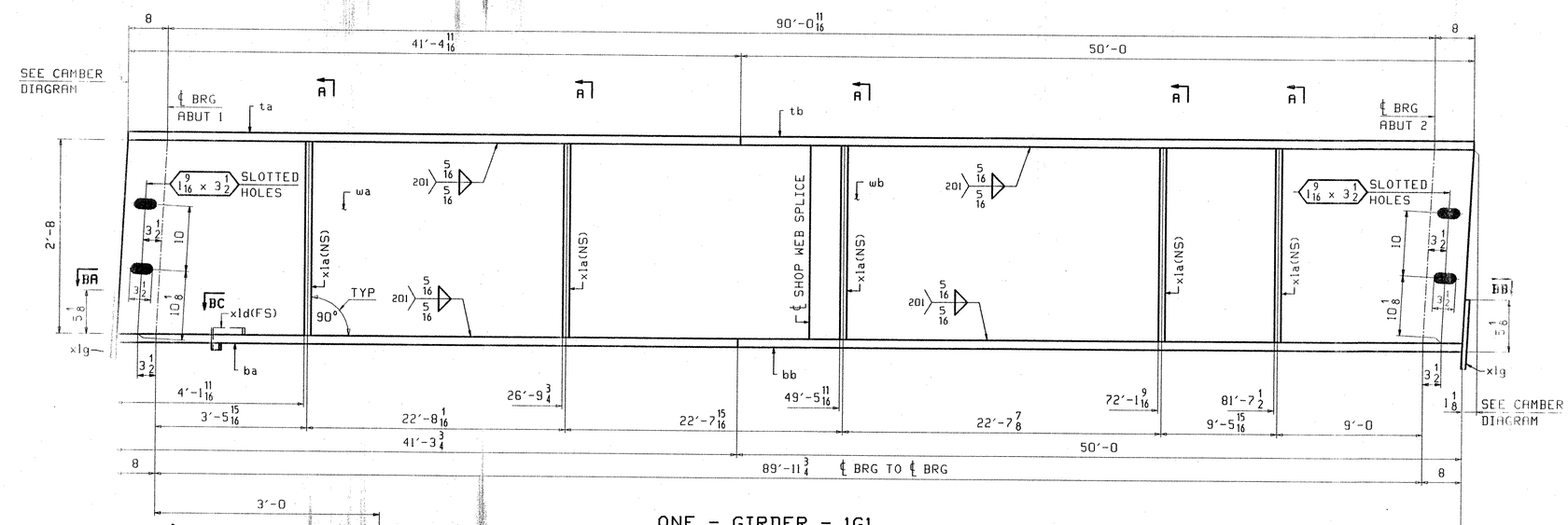

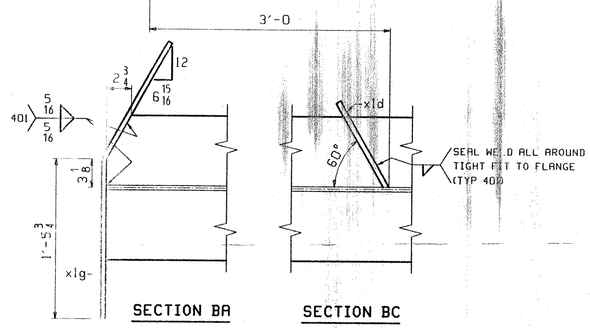

SECTION BA

SECTION BC

ONE - GIRDER - 1G1

FOR GIRDER STANDARD DETAILS SEE DRAWING X1.
FOR CAMBER DIAGRAM SEE DRAWING C1.
FOR GENERAL NOTES SEE DRAWING GN1.
H2-3 DENOTES MATERIAL SUBJECT TO CHARPY V-NOTCH TESTING.

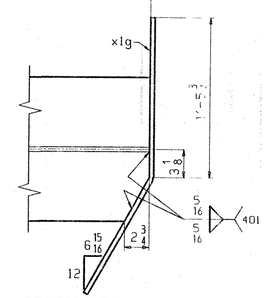

SECTION BB

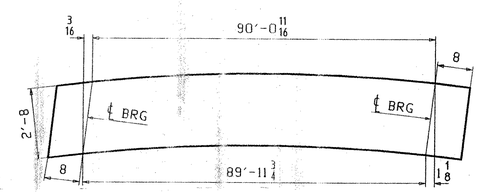

ORIENTATION DIAGRAM
SEE C1

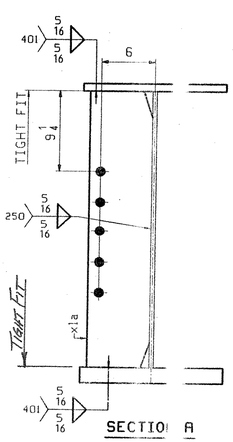

SECTION A

ABM INFO		SHIP	BILL OF MATERIAL					JOB NO.	DRAWING NO.	REV.
									1	
PAGE	LINE	MARK	QTY	MARK	MATERIAL	LENGTH FT	LENGTH INCHES	REMARKS	WT	PROCUREMENT NOTES
		1G1	1		GIRDER				19122	
1	J		1	wa	PL 1/2×33 5/8	45	8 1/2	(M270-50WT2) (H2-3)		
1	J		1	wb	PL 1/2×33 5/8	45	8 15/16	(M270-50WT2) (H2-3)		
1	G		1	ta	PL 7/8×16	41	4 11/16			
1	E		1	tb	PL 7/8×16	50	0			
1	C		1	ba	PL 1 7/8×16	41	3 3/4	(A709-50WT2) (H2-3)		
1	A		1	bb	PL 1 7/8×16	50	0	(A709-50WT2) (H2-3)		
2	B		5	xla	PL 1/2×7 1/2	2	8			
2	E		1	xld	PL 1/4×3 7/8	0	11 1/4			
2	D		2	xlg	PL 1/4×9	2	8 7/8	BENT		

REV.	REMARKS	DATE	DWN	CHK	APP	Q.A.	NO.	DIA.	LGT	TYPE	WASHER
	OUT FOR APPROVAL	K 1/13									
	OUT FOR APPROVAL										
	ISSUED TO SHOP										
	FIELD & OFFICE										

RECEIVED
OK'D BY _____ OK'D BY _____
DEC 09 2003
RESUBMIT _____ APPROVED As Noted
BY RKW DATE 1-8-04

MATERIAL: A709-50W (UN)
ELECTRODES:
HOLES: 15/16"Ø (UN)
SHOP BOLTS: NONE
SURFACE PREP. & PAINT: NONE

DESCRIPTION: GIRDER - 1G1
JOB: BOSTWICK ROAD OVER VERMONT RAILWAY
BRIDGE NO. 15 HIGHWAY NO. TH 3
TOWN OF SHELBURNE
ENGR: McFarland-Johnson, INC.
CONTRACTOR: S.D. IRELAND BROS. CORP.
PROJ NO. BRO 1445(30)
CUSTOMER: VERMONT AGENCY OF TRANSPORTATION

DRAWN BY	DATE
JTB	11/14
CHKD BY	
FTM	11/21/03
APPROV BY	
SUPERVISOR	W. J. GATTI
Q.A.	

CASCO BAY STEEL STRUCTURES, INC.
75 SPRING HILL ROAD SACO, MAINE 04072
PHONE (207) 282-7360 FAX. (207) 282-1179

JOB NO.	DRG. NO.
209	1
	REV. △

17.6 <<