Metric

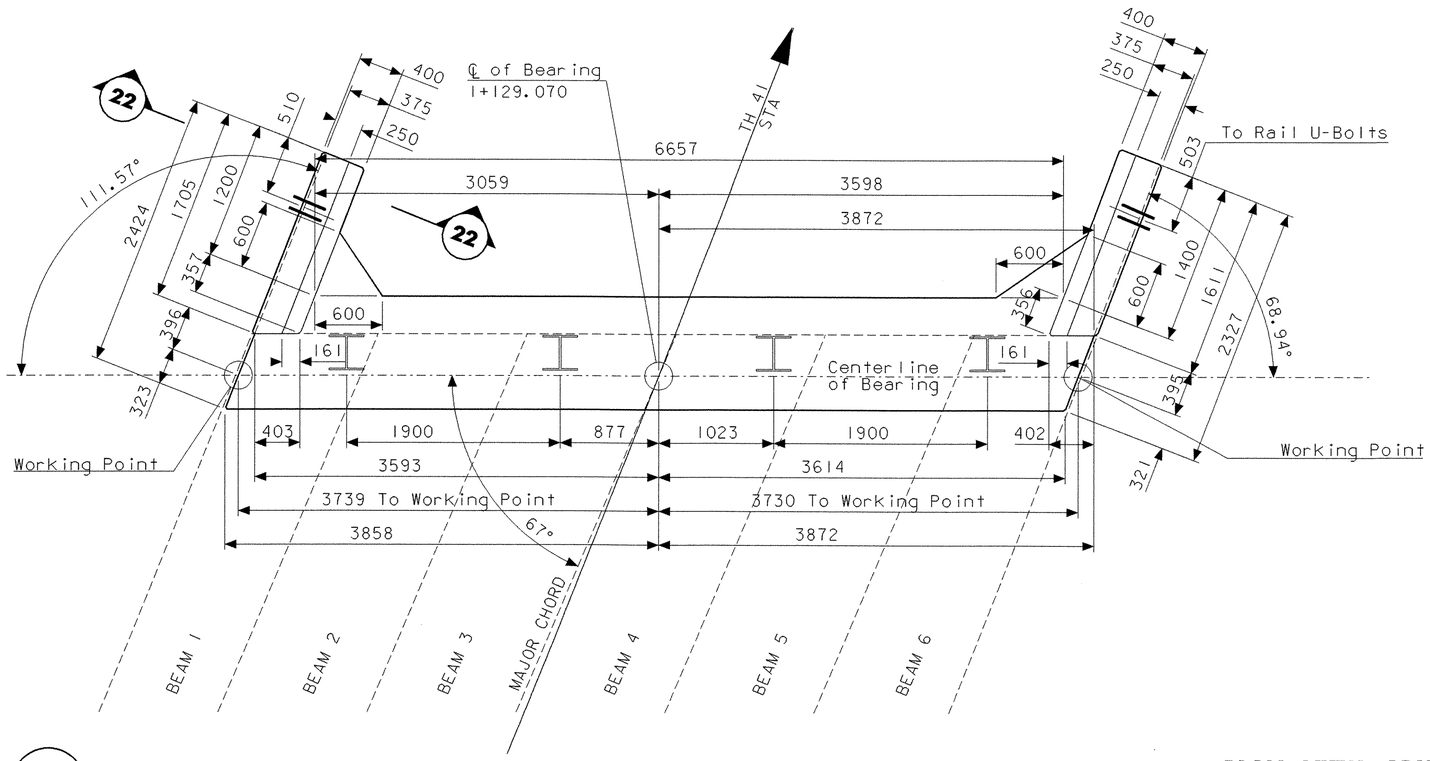

20 PLAN VIEW ABUTMENT #2

SCALE 1:250

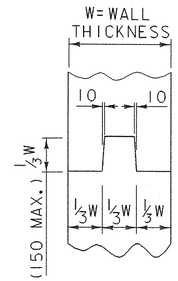

22a TYPICAL CONCRETE CONSTRUCTION JOINT

NTS

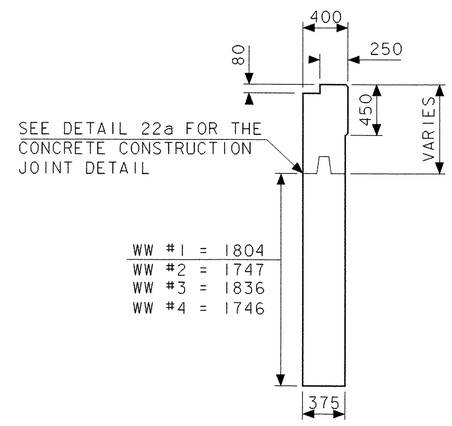

22 WINGWALL TYPICAL

SCALE 1:250

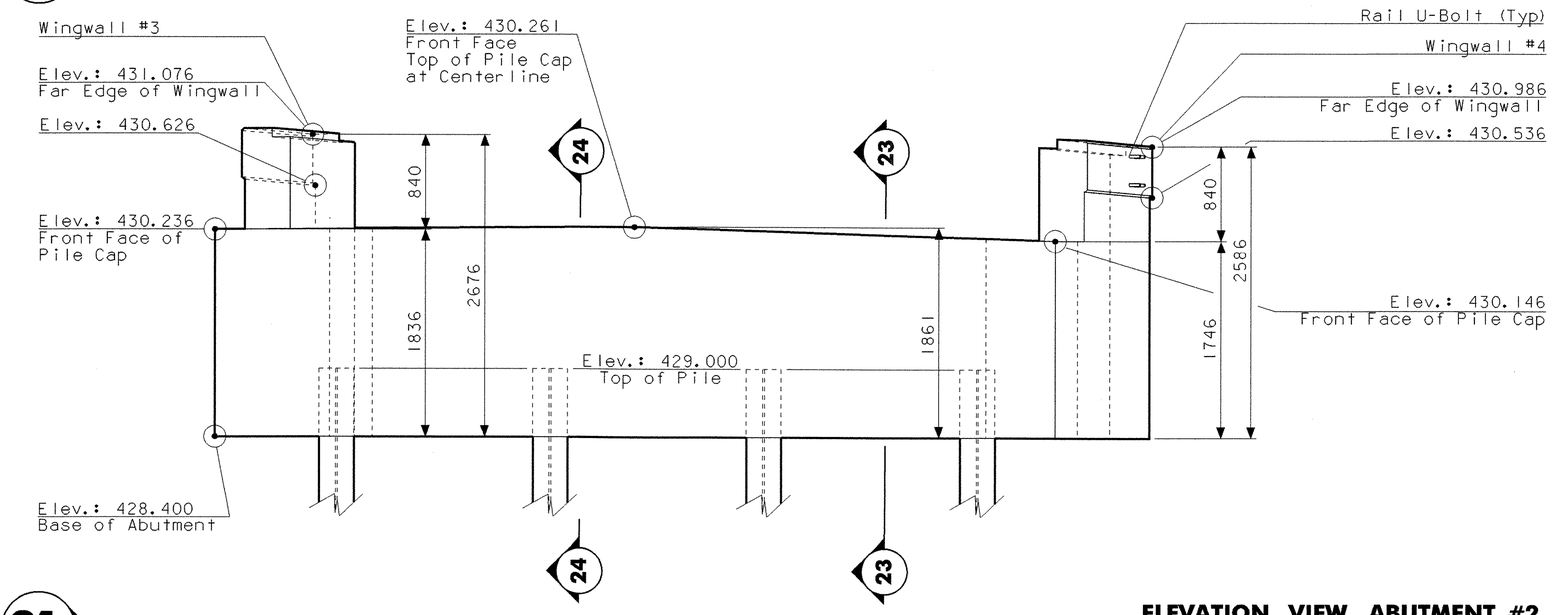

21 ELEVATION VIEW ABUTMENT #2

SCALE 1:250

ABUTMENT #2 PLAN AND LAYOUT

PROJECT NAME: Charleston	
PROJECT NUMBER: BRO 1449 (22)	
FILE NAME: 93J051/STR./sj051abt	PLOT DATE: 13-APR-2006
PROJECT MANAGER: M. EVANS-MONGEON	DRAWN BY: G. COLGROVE
DESIGNED BY: G. COLGROVE	CHECKED BY: S. SCRIBNER
IPARM: sj051abt2.i	SHEET 35 OF 50