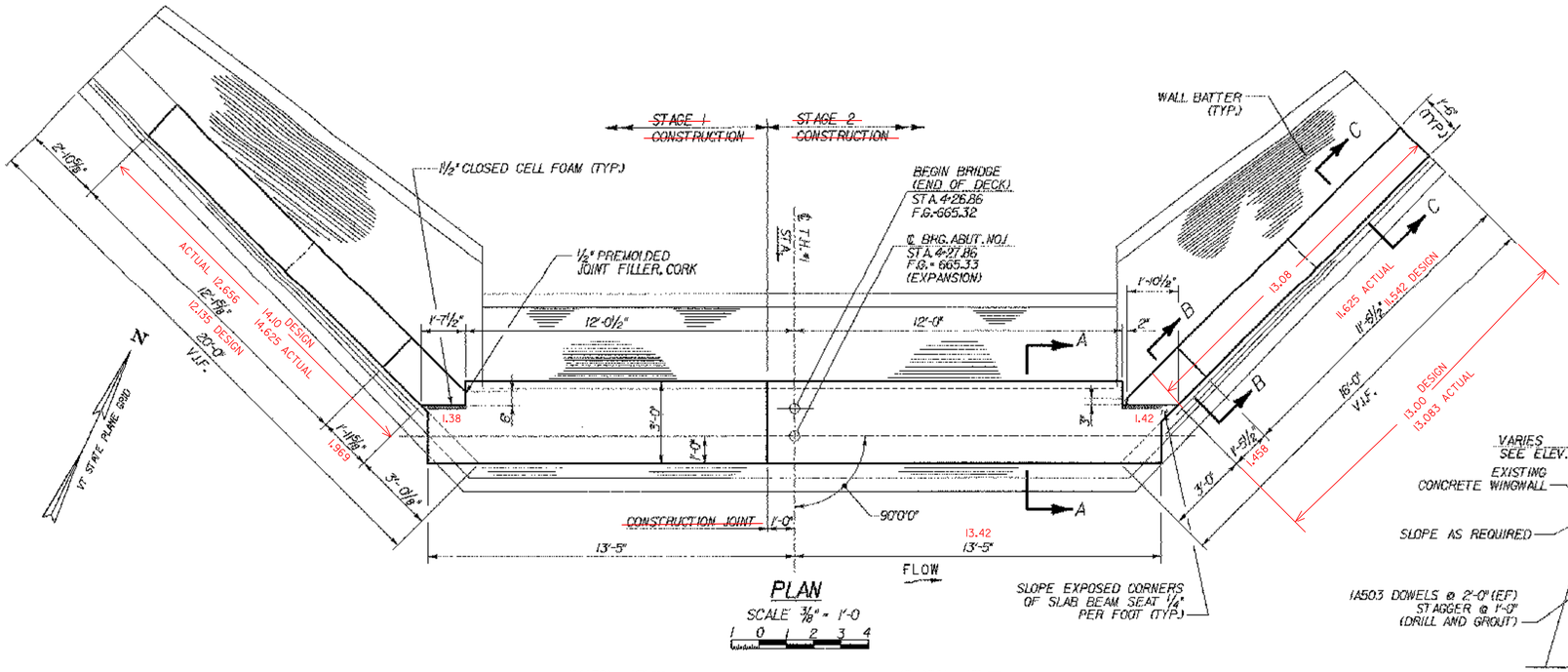

PLAN

SCALE ⅜" = 1'-0

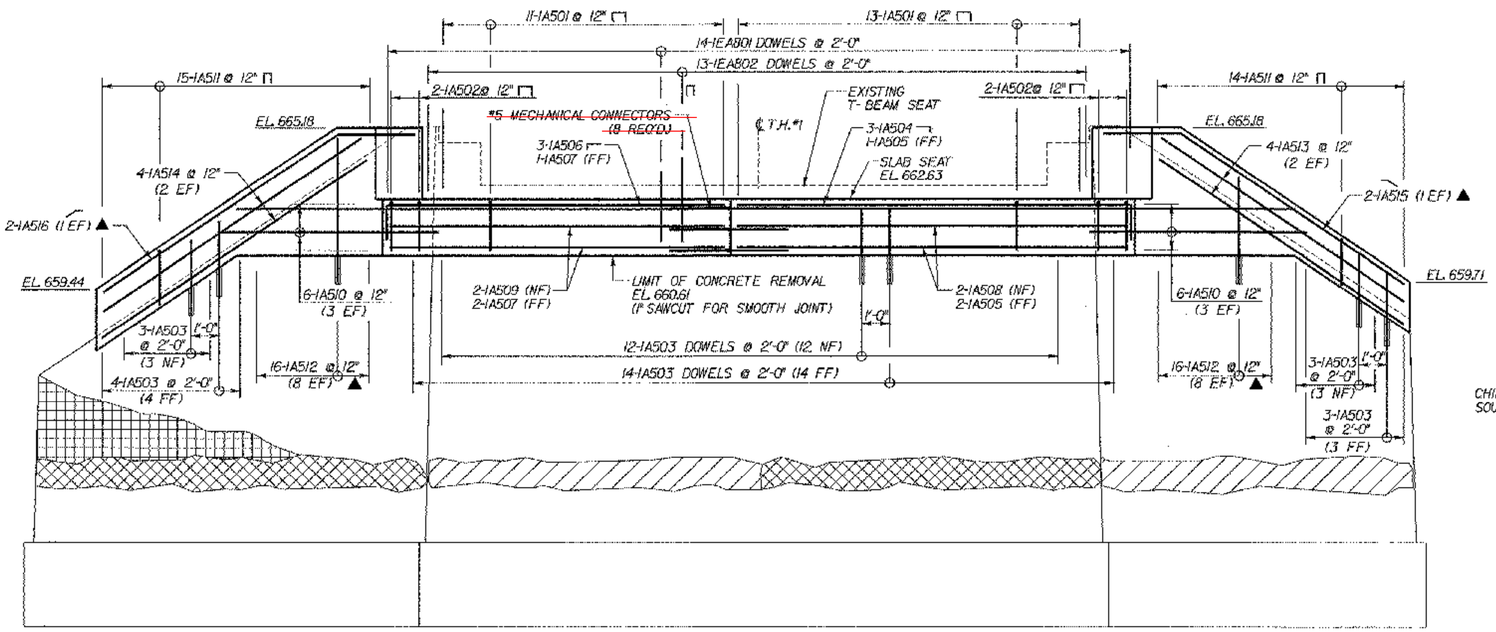

ELEVATION

SCALE ⅜" = 1'-0

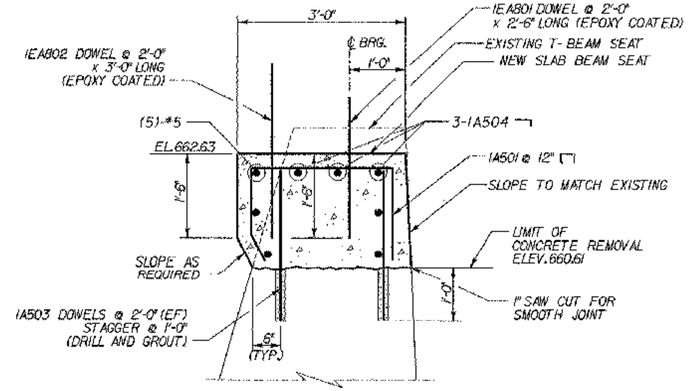

SECTION A-A

SCALE ¾" = 1'-0

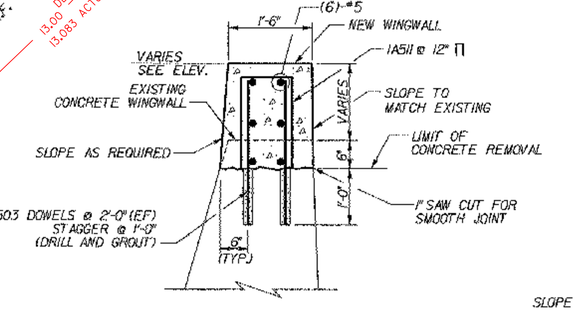

SECTION C-C

SCALE ¾" = 1'-0

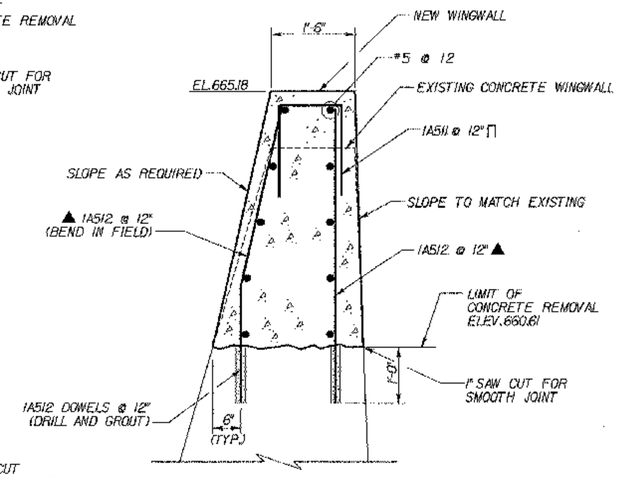

SECTION B-B

SCALE ¾" = 1'-0

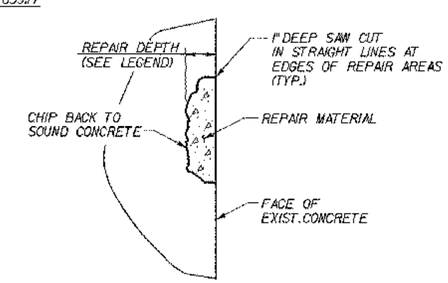

REFER TO SUPPLEMENTAL SPECIFICATION SECTION 580 "STRUCTURAL CONCRETE REPAIR" FOR SURFACE PREPARATION AND REPAIR MATERIAL REQUIREMENTS.

DETAIL CONCRETE REPAIR

NTS

LEGEND FOR CONCRETE REPAIR

- APPROXIMATE LIMITS OF ITEM 580J3, REPAIR OF CONCRETE SUBSTRUCTURE SURFACE, CLASS I (MOD.) (MAX. REPAIR DEPTH OF 3")
- APPROXIMATE LIMITS OF ITEM 580J4, REPAIR OF CONCRETE SUBSTRUCTURE SURFACE, CLASS II (MOD.) (REPAIR DEPTH GREATER THAN 3", MAX. OF 6")
- APPROXIMATE LIMITS OF ITEM 580J5, REPAIR OF CONCRETE SUBSTRUCTURE SURFACE, CLASS III (REPAIR DEPTH GREATER THAN 6")

NOTES:

1. AREAS OF CONCRETE SURFACE REPAIR ON EXISTING ABUTMENTS AND PIER TO BE DETERMINED IN THE FIELD BY THE ENGINEER. AREAS SHOWN ARE SCHEMATIC ONLY AND ARE NOT INTENDED TO SHOW ACTUAL LIMITS OR CLASS.

~~2. #5 REINFORCING STEEL MECHANICAL CONNECTORS SHALL BE USED AS DETAILED. THEY SHALL HAVE A MINIMUM TENSILE CAPACITY OF 150% Fy OF THE BARS TO BE SPLICED. MECHANICAL CONNECTORS IN ABUTMENTS AND PIER SHALL BE PAID FOR UNDER THE ITEM 507.19 "#5 MECHANICAL BAR CONNECTOR". HARDWARE INCLUDING THE 2'-2" LAP BAR SHALL BE INCIDENTAL.~~

NOTE:

NF = NEAR FACE
FF = FAR FACE
EF = EACH FACE
▲ = CUT TO FIT IN FIELD
3" CLR. UNLESS OTHERWISE SPECIFIED ON THE PLANS.

DH Dufresne-Henry

STATE OF VERMONT
AGENCY OF TRANSPORTATION

Town Of	CORINTH	Bridge No.	10C
Highway No.	T.H. 1	Log Sta. / Surv. Sta.	
TOWN HIGHWAY NO. 1 OVER WAITS RIVER			
ABUTMENT #1 DETAILS			
Designed By S. BURBANK		Drawn By M. MEILLEUR	
Checked By M. CHENETTE	Date 05/03	Bridge Design Supervisor M. CHENETTE	Date 05/03
PROJECT	CORINTH	PROJECT NO.	TH2-9352
DH CAD Filename: ...\Cor-abut1.dgn		Plot Date: 05/07/2003	
Bridge Sheet No.		Sheet 18 of 28	