Metric

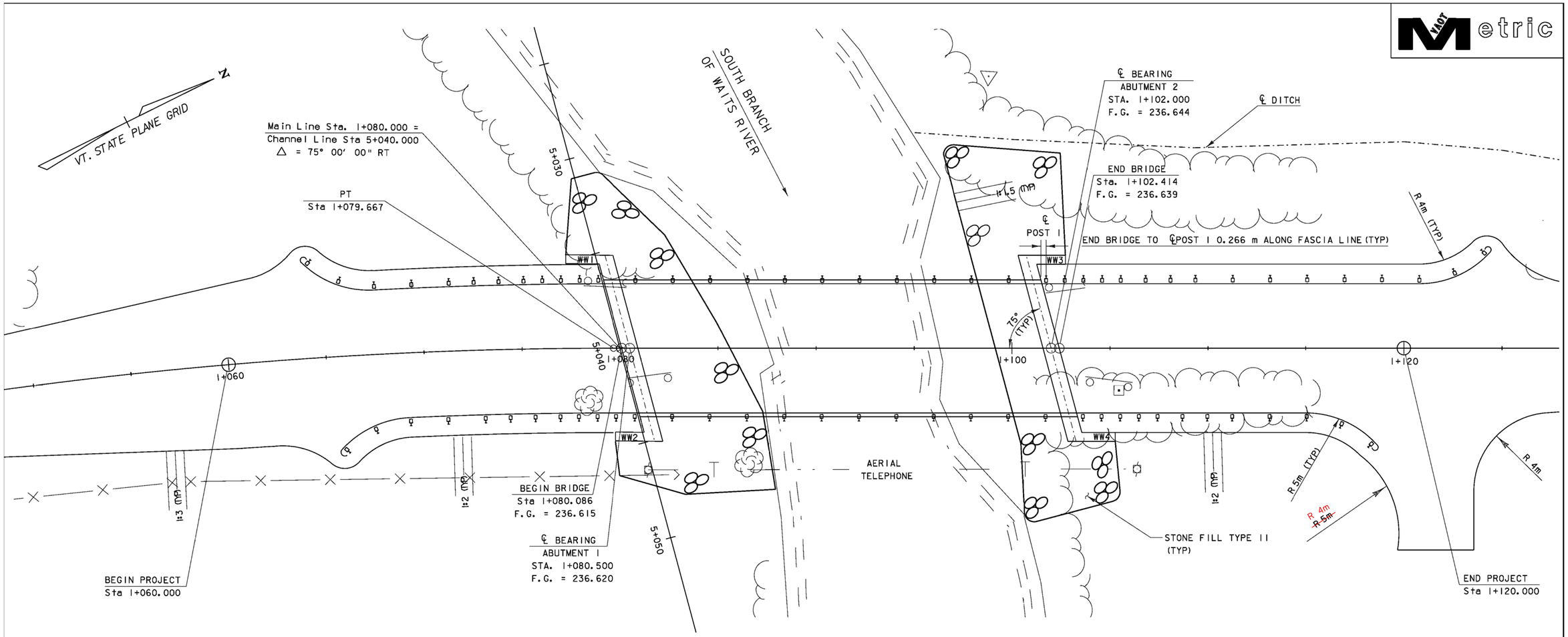


PLAN

0 2 4 6 8 10
SCALE 1:100

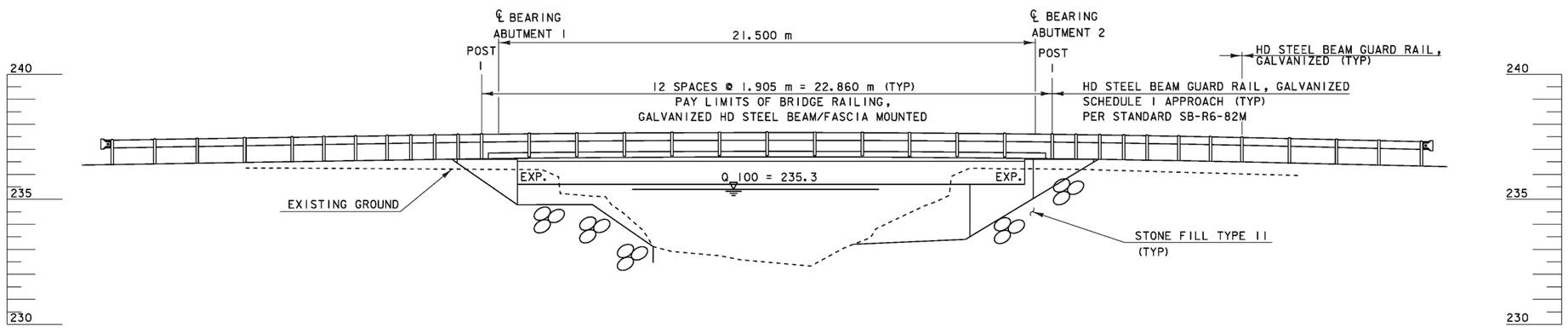


ELEVATION

0 2 4 6 8 10
SCALE 1:100

| DATUM | |
|---|---|
| VERTICAL | NAVD 88 |
| HORIZONTAL | NAD 83/92 |

| | |
|---|---|
| PROJECT: CORINTH | PROJECT NO.: STP BRO 1447 (22) (RE-ADVERTISED) |
| DESIGN FILE NAME: /str4/93j042/sj042pe.dgn | |
| IPARM FILE NAME: sj042pe.i | PLOT DATE: 16-JUL-2008 |
| SURVEYED BY: R.D. GILMAN | SURVEY DATE: 3/15/95 |
| SQUAD LEADER: C.P. WILLIAMS | DRAWN BY: P.G. JARVIS |
| PLAN AND ELEVATION | SHEET: 17 OF 42 |