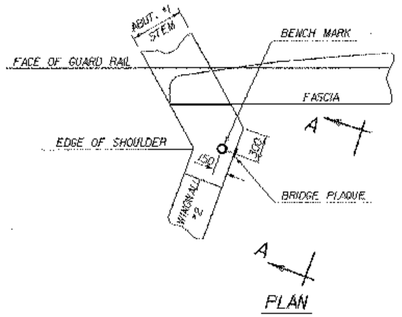

PLAN

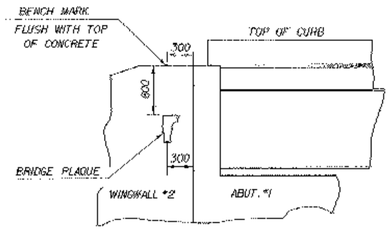

VIEW "A - A"

LOCATE BENCH MARK AND BRIDGE PLAQUE

THE BENCH MARK AND BRIDGE PLAQUE WILL BE SUPPLIED BY THE AGENCY OF TRANSPORTATION AND SHALL BE INSTALLED BY THE CONTRACTOR AT ABUTMENT #1 ON THE RIGHT SIDE AS SHOWN OR AS DIRECTED BY THE ENGINEER.

* (NABI) = NOT A BID ITEM

/str5/93j022/sj022qu1.dgn sj022qu1.i
5-JUN-1998

BRIDGE QUANTITY SHEET

Metric

ITEM NO.	ITEM	UNIT	QUANTITY BREAKDOWN BRIDGE 20	QUANTITY BREAKDOWN BRIDGE 14	TOTAL	FINAL
201.10	CLEARING AND GRUBBING (INCLUDING INDIVIDUAL TREES AND STUMPS)	LS	0.60	0.40	1.0	
203.15	COMMON EXCAVATION	m³	1080	160	1240	
203.16	SOLID ROCK EXCAVATION	m³	50		50	
203.27	UNCLASSIFIED CHANNEL EXCAVATION	m³	80		80	
203.31	SAND BORROW	m³	950	370	1320	
203.32	GRANULAR BORROW	m³	50	50	100	
204.20	TRENCH EXCAVATION OF EARTH	m³	100	10	110	
204.30	GRANULAR BACKFILL FOR STRUCTURES MOD	m³	410	280	690	
204.40	COFFERDAMS (STA 1+330)	LS		1	1	
204.40	COFFERDAMS (STA 1+337.5)	LS		1	1	
204.40	COFFERDAMS (STA 1+130)	LS	1		1	
204.40	COFFERDAMS (STA 1+142)	LS	1		1	
301.35	SUBBASE DENSE GRADED CRUSHED STONE	m³	720	310	1030	
401.10	AGGREGATE SURFACE COURSE MOD	m³	300	170	470	
501.25	CONCRETE, CLASS B	m³	198	146	344	
507.15	REINFORCING STEEL	kg	10520	8620	19140	
507.17	EPOXY COATED REINFORCING STEEL MOD	kg	4490	2170	6660	0
514.10	WATER REPELLENT	L	53	36	89	
525.41	BRIDGE RAILING - HDSB/FASCIA MOUNTED (TYPE D)	m	26.7	19.1	45.8	
529.15	REMOVAL OF STRUCTURE (STA 1+334)	EA		1	1	
529.15	REMOVAL OF STRUCTURE (STA 1+136)	EA	1		1	
	* * BEGIN OPTION ITEMS * *					
601.0015	CSP (68mm X 13mm) (450mm - 1.63mm)	m	13		13	
601.0915	CPEP (450 mm)	m	13		13	
601.0015	CSP (68mm X 13mm) (450mm - 1.63mm)	m	15		15	
601.0915	CPEP (450 mm)	m	15		15	
	* * END OPTION ITEMS * *					
604.25	PRC PIPE DROP INLET W/ CAST IRON GRATE	EA	1		1	
605.10	150mm UNDERDRAIN	m	90	27.432	90	
605.95	UNDERDRAIN FLUSHING BASIN	EA	1		1	
608.25	ALL PURPOSE EXCAVATOR RENTAL, TYPE 1	HR	2	1	3	
613.10	STONE FILL, TYPE I	m³	10	10	20	
613.11	STONE FILL, TYPE II	m³	180		180	
613.12	STONE FILL, TYPE III	m³	330	160	490	
621.21	HEAVY DUTY STEEL BEAM GUARD RAIL (TYPE IV)	m	132.4	78.4	210.8	
621.60	ANCHOR FOR STEEL BEAM GUARD RAIL	EA	6	4	10	
631.10	FIELD OFFICE-ENGINEERS MOD	LS	~~0.60~~ .5	~~0.40~~ .5	1.0	1.0
631.16	TESTING EQUIPMENT - CONCRETE	LS	~~0.60~~ .5	~~0.40~~ .5	1.0	1.0
631.25	FIELD OFFICE TELEPHONE (NABI)*	LS	0.60	0.40	1.0	
635.10	MOBILIZATION	LS	0.60	0.40	1.0	1.0
649.31	GEOTEXTILE UNDER STONE FILL	m²	390	160	550	
649.51	GEOTEXTILE FOR SILT FENCE	m²	250	120	370	
649.61	GEOTEXTILE FOR FILTER CURTAINS	m²	170	80	250	
651.15	SEED	kg	35	15	50	
651.17	SEED - WINTER RYE	kg	6	5	10	
651.18	FERTILIZER	kg	250	100	350	
651.20	AGRICULTURAL LIMESTONE	T	3	1	4	
651.25	HAY MULCH	T	3	1	4	
651.26	HAY BALES FOR EROSION CONTROL	EA	100	50	150	
651.35	TOPSOIL	m³	80	30	110	
651.40	GRUBBING MATERIAL	m²	490	50	540	
654.10	EROSION MATTING	m²	30	10	40	

BRIDGE(S) AT STATION(S) STA 1+130.000 and 1+330.000
LOCATION(S) OVER MENDON BROOK AND BREWERS BROOK

PREPARED BY: M. EVANS-MONGEON
CHECKED BY: R. PELLETT
SUPERVISOR: C. KELLER

PROJECT: MENDON
PROJECT NO: BRO 1443(28) & TH 3 9418
BR 3 OF 66
SHEET NO: 3 OF 66

Metric

525.41 BRIDGE RAILING - HD STEEL BEAM/FASCIA MOUNTED, TYPE D

STN 1+127.3 - 1+140.6 RT.
STN 1+131.4 - 1+144.8 LT.

621.21 HEAVY DUTY STEEL BEAM GUARD RAIL, TYPE 4

STN 1+107.0 - 1+127.3 RT.
STN 1+140.6 - 1+151.0 RT.
STN 1+118.0 - 1+131.4 LT.
STN 1+144.8 - 1+157.0 LT.

601.2615 450 ~~CPEP OR~~ (CSP ~~OPTION~~)

STN 1+070.0 RT. -LT.

CONSTRUCT BERM

CHAN. STN 2+022 - 2+030

621.60 ANCHOR FOR STEEL BEAM GUARD RAIL

STN 1+109.0 RT.
STN 1+120.5 LT.
STN 1+149.5 RT.
STN 1+154.5 LT.

N

VT STATE PLANE GRID

Curve #2

Radius:	140.000
Delta:	16°43'39.5"L
Length:	40.873
Tangent:	20.583
Chord:	40.728
Ordinate:	1.489
External:	1.505
2T-L:	0.293
Banking:	0.040

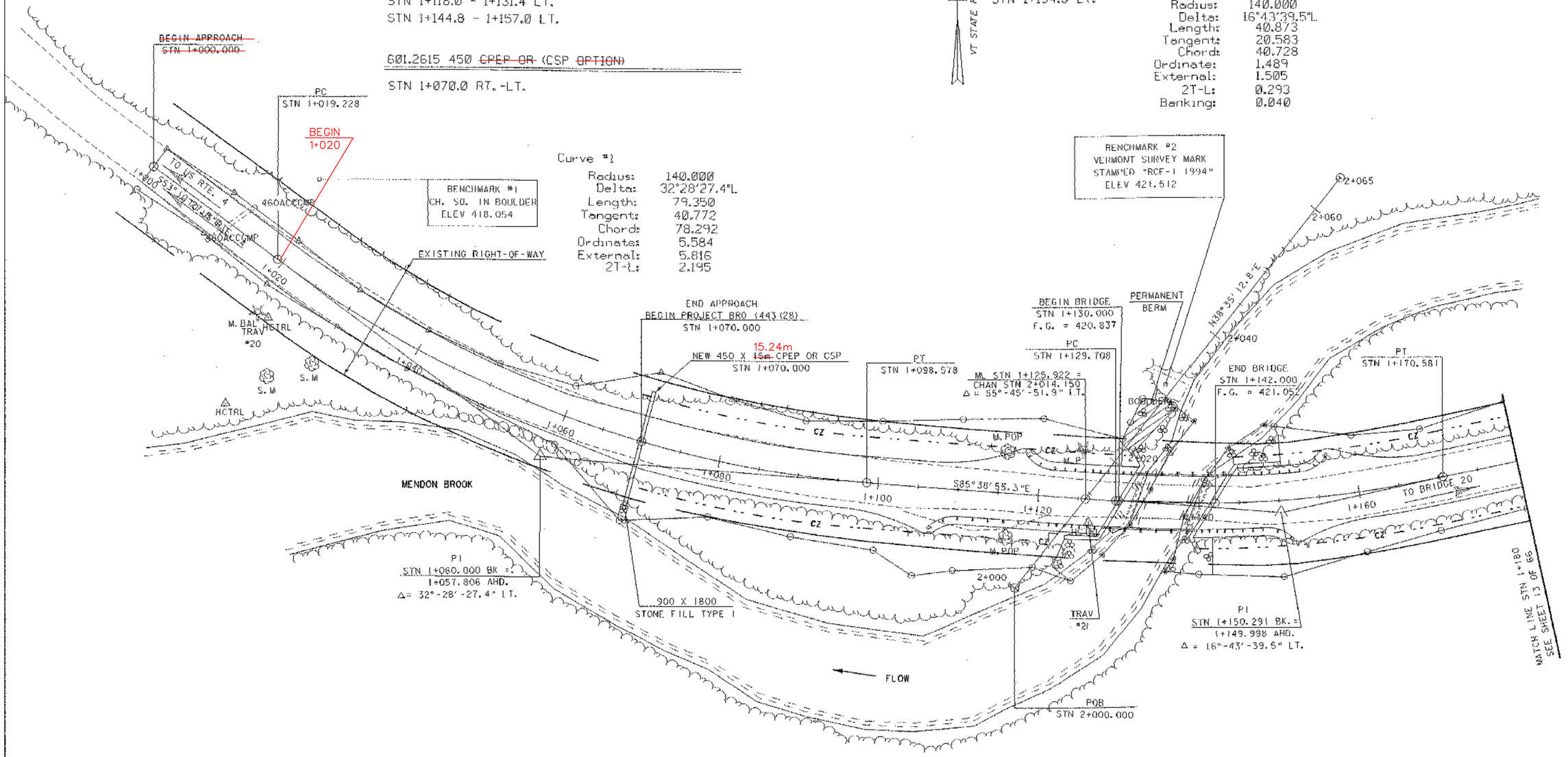

EXISTING BRIDGE DATA

BRIDGE WIDTH: 4.27 m
ROADWAY WIDTH: 5.49 m
BRIDGE LENGTH: 8.53 m
CLEAR SPAN: 6.7 m
CLEAR HEIGHT: 2.4 m
THE EXISTING STRUCTURE IS A CONCRETE DECK ON ROLLED BEAM STRINGERS.
THE EXISTING ABUTMENTS ARE POURED IN PLACE CONCRETE. THERE IS ALSO AN EXISTING BAILEY BRIDGE.

C.Z. = CLEAR ZONE

0 10 20 30
SCALE IN METERS
1:250

PROJECT: MENDON	PROJECT NO.: BRO 1443 (28)
DESIGN FILE NAME: /USR/STRI/93J022/SJ022BOR.DGN	
IPARM FILE NAME: SJ022LSU	PLOT DATE: 5-JUN-1998
PLAN SHEET	
	SHEET: 12 OF 66

604.25 PRECAST REINFORCED CONCRETE PIPE DROP INLET WITH CAST IRON GRATE TYPE B

STN 1+220.0 RT.

605.10 150 mm UNDERDRAIN

STN 1+220.0 - 1+~~300.0~~ 290.0 RT.

605.95 UNDERDRAIN FLUSHING BASIN

STN 1+~~300.0~~ 290.0 RT.

621.21 HEAVY DUTY STEEL BEAM GUARD RAIL, TYPE 4

STN 1+198.0 - 1+262.0 LT.

621.60 ANCHOR FOR STEEL BEAM GUARD RAIL

STN 1+200.0 LT. STN 1+260.0 LT.

649.31 GEOTEXTILE UNDER STONE FILL

STN 1+218.0 - 1+260.0 LT.

613.11 STONE FILL, TYPE II

STN 1+212.0 - 1+245.0 RT.

613.12 STONE FILL, TYPE III

STN 1+218.0 - 1+~~260.0~~ 50.0 LT.

651.40 GRUBBING MATERIAL

STN 1+218.0 - 1+260.0 LT.
STN 1+212.0 - 1+245.0 RT.

601.2615 450 ~~CPEP OR~~ CSP ~~OPTION~~

STN 1+220.0 RT. - 1+220.0 LT.

N

VT STATE PLANE GRID

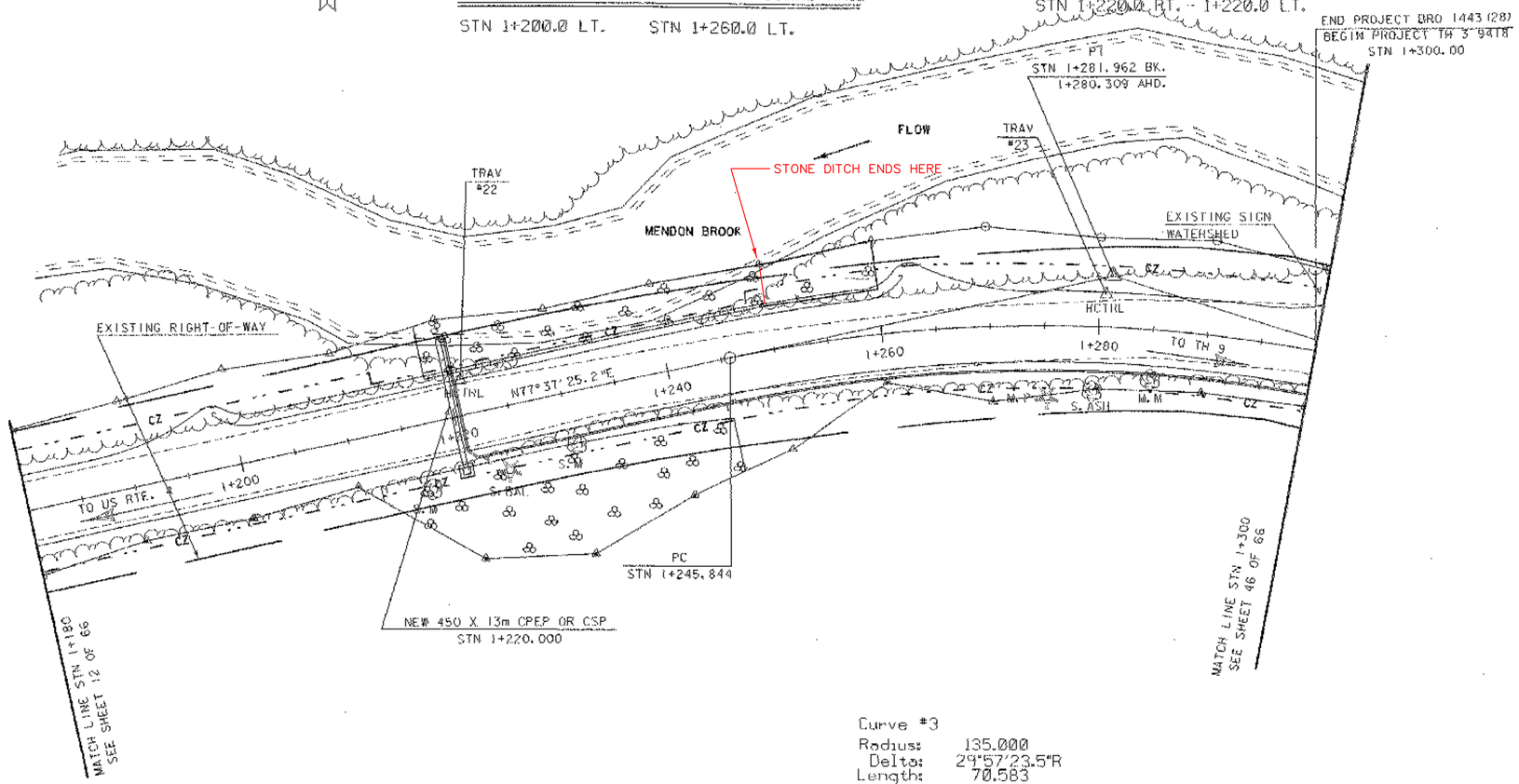

Curve #3

Radius:	135.000
Delta:	29°57'23.5"R
Length:	70.583
Tangent:	36.118
Chord:	69.782
Ordinate:	4.587
External:	4.748
2T-L:	1.653
Banking:	0.040

C.Z. = CLEAR ZONE

0 10 20 30
SCALE IN METERS
1:250

PROJECT: MENDON	PROJECT NO.: BRO 1443(28)
DESIGN FILE NAME: /USR/STRI/93J022/SJ022BDR.DGN IPARM FILE NAME: SJ022LS2.I	PLOT DATE: 5-JUN-1998
PLAN SHEET	
	SHEET: 13 OF 66

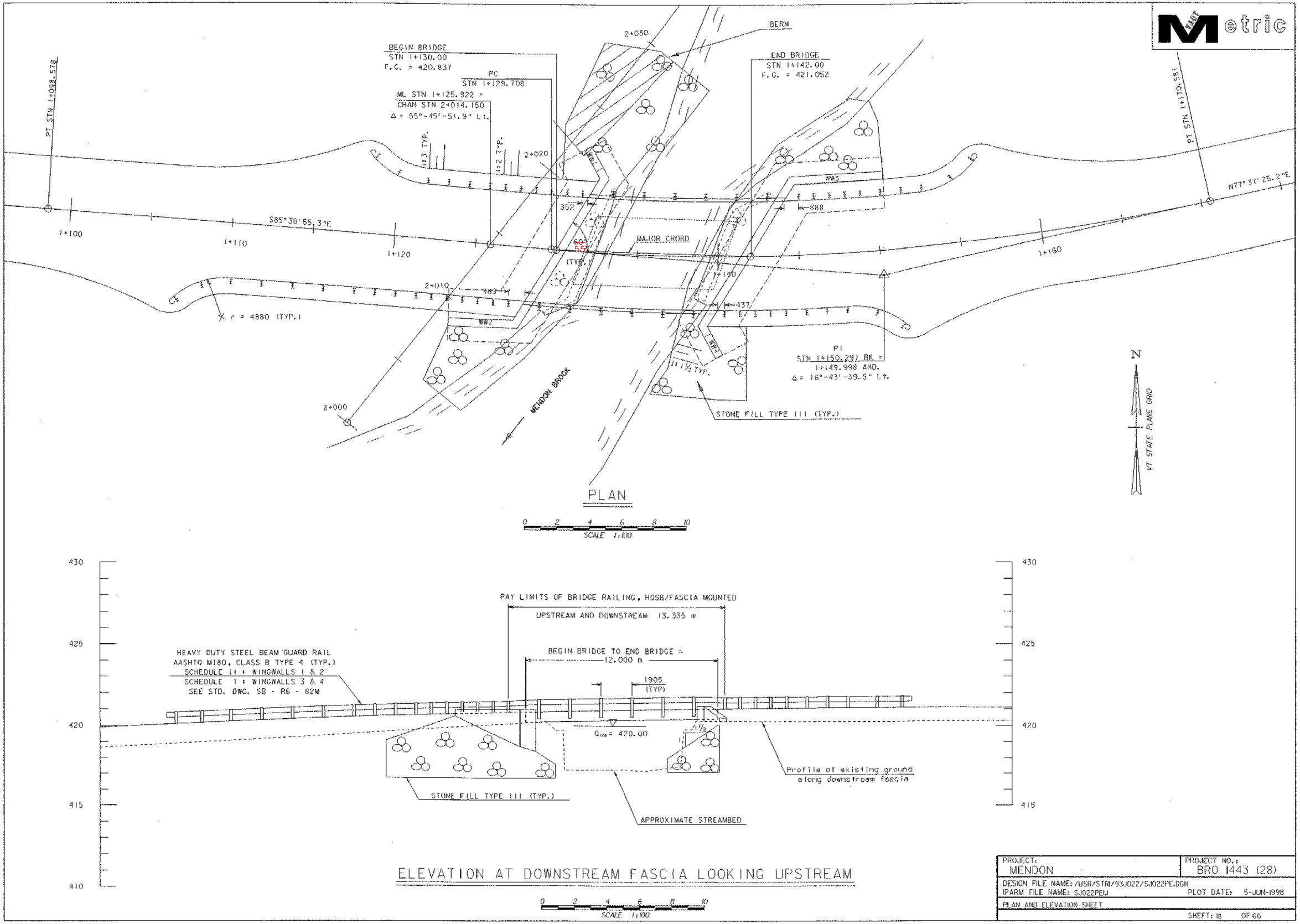

PROJECT: MENDON	PROJECT NO.: BRO 1443 (28)
DESIGN FILE NAME: /USR/STR1/93J022/SJ022PE.DGN IPARM FILE NAME: SJ022PEJ	PLOT DATE: 5-JUN-1998
PLAN AND ELEVATION SHEET	
	SHEET: 18 OF 66

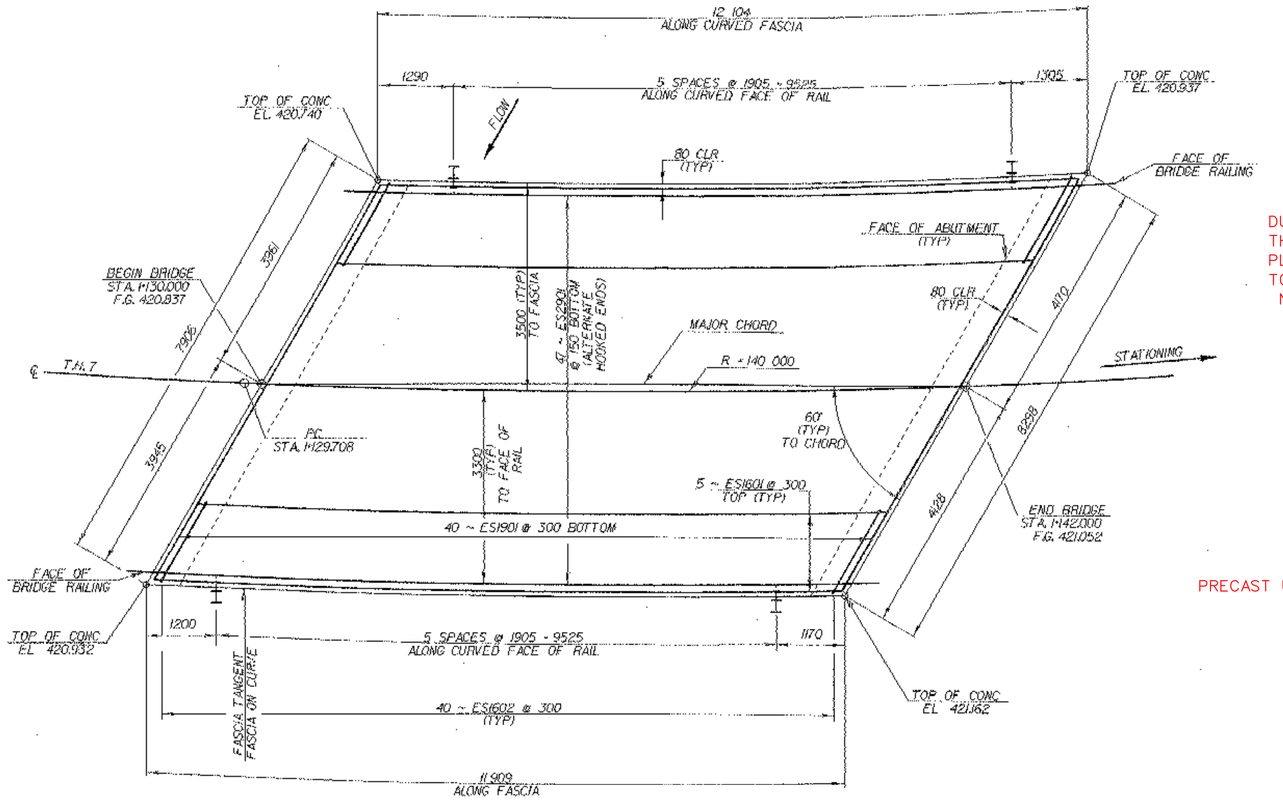

PLAN

0 1 2 3 4 5

SCALE = 1:50

DUE TO MISTAKE AT PRECAST PLANT
THE GR STIRUP WAS COMPLETELY
PLACED IN PRECAST MAKING IT NECESSARY
TO ORDER CUSTOM POSTS.
NO EXTRA COST.

PRECAST USED FOR DECK NOT SLAB

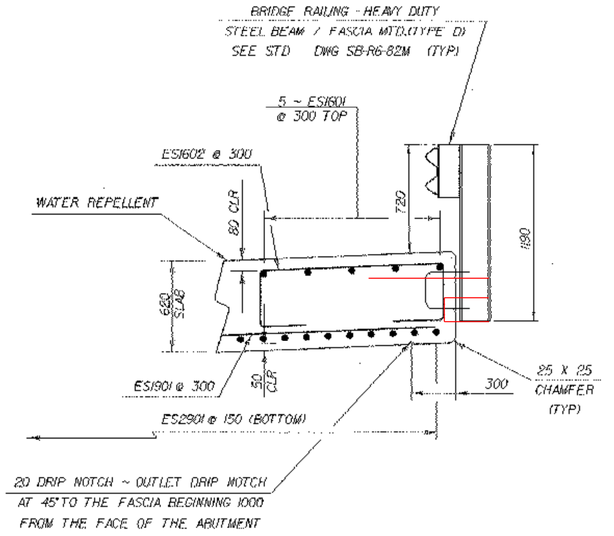

RAIL DETAIL

0 1 2

SCALE = 1:20

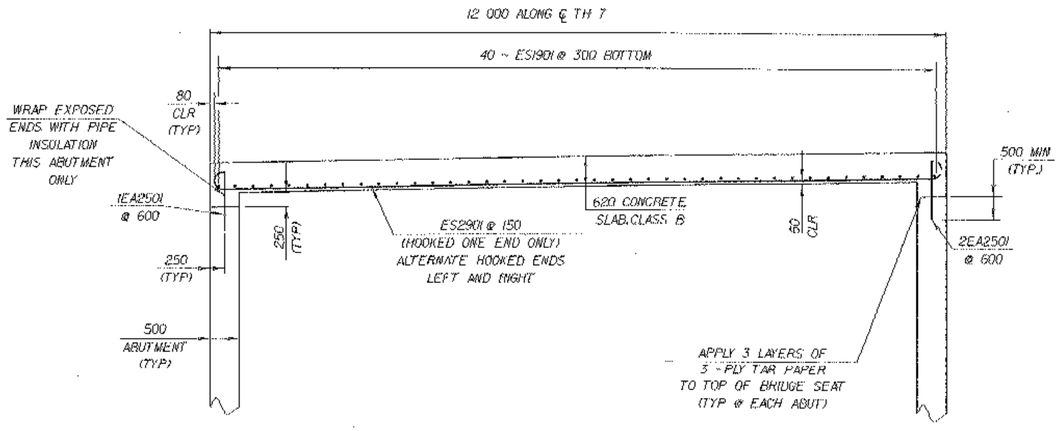

ELEVATION ALONG ℄

0 1 2 3 4 5

SCALE = 1:50

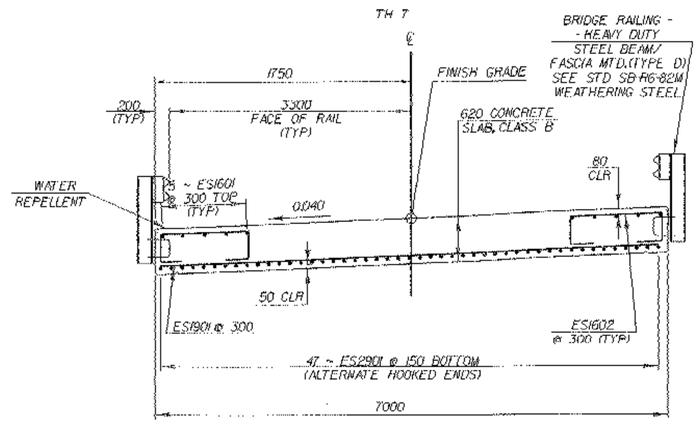

TYPICAL BRIDGE SECTION

0 1 2 3 4

SCALE = 1:40

NOTES:

1. THE SLAB SHALL BE CAMBERED A TOTAL OF 50 AT MIDSPAN. THIS CAMBER SHALL APPROXIMATE A CIRCULAR CURVE.
2. THE CONCRETE DECK SHALL BE BROOM FINISHED NORMAL TO CENTERLINE.
3. THE COST OF THE TAR PAPER AND PIPE INSULATION AND THEIR APPLICATIONS SHALL BE SUBSIDIARY TO ITEM 501.25 "CONCRETE, CLASS B".
4. THE EA2501 DOWELS SHALL BE EPOXY COATED.
5. DENOTES CUT TO FIT IN FIELD
6. THE "E" PREFIX DENOTES EPOXY COATED REINFORCING STEEL.
7. ALL REINFORCING STEEL TO HAVE 80 MM CLEAR UNLESS OTHERWISE NOTED.

STATE OF VERMONT
AGENCY OF TRANSPORTATION

Town Of	MENDON	Bridge No.	20
Highway No.	TH 7	Log Sta.	
		Surv. Sta.	

TH 7 OVER THE MENDON BROOK

SLAB DETAIL SHEET

Designed By M.E. MONGEON		Drawn By R.C. HAZEN	
Checked By M.E. MONGEON	Date 10/97	Bridge Design Supervisor C. KELLER	Date 10/97
PROJECT MENDON		PROJECT NO. BRO 1443(28)	
I.G.C. Info. /str5/93J022/sj022slbdgn			sj022slbd
Bridge Sheet No.		Sheet 21 of 66	

PLOTTED 5-JUN-1998

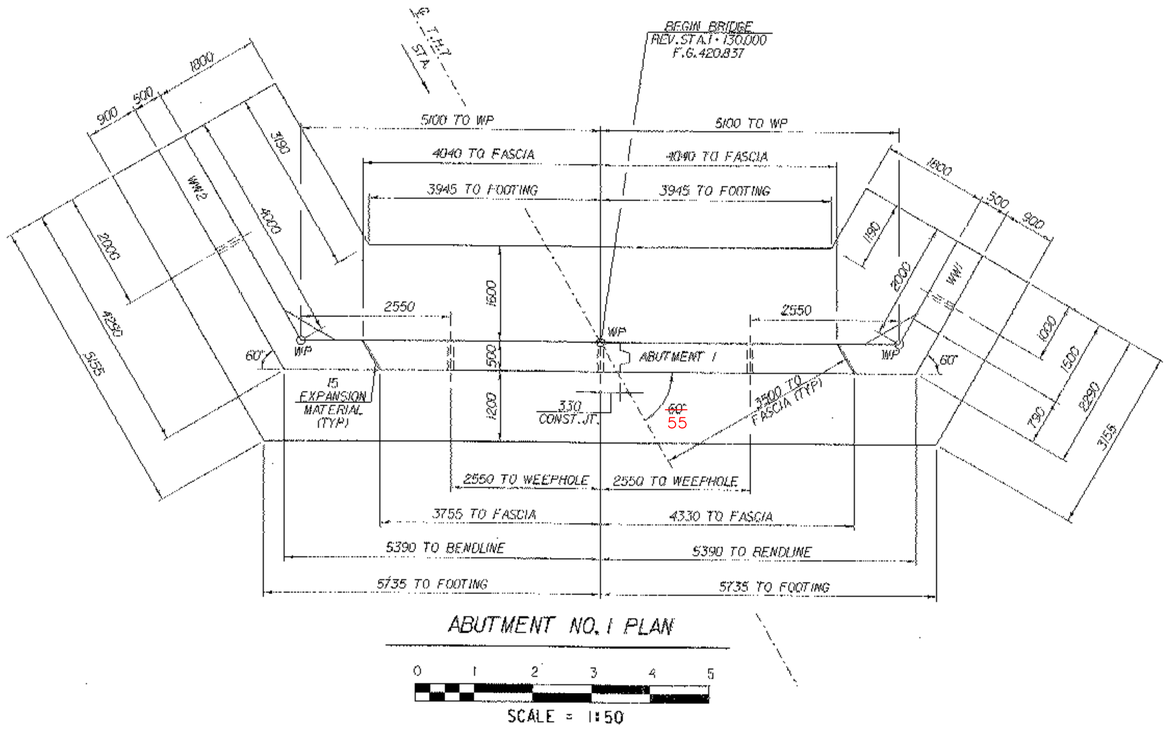

ABUTMENT NO. 1 PLAN

0 1 2 3 4 5

SCALE = 1:50

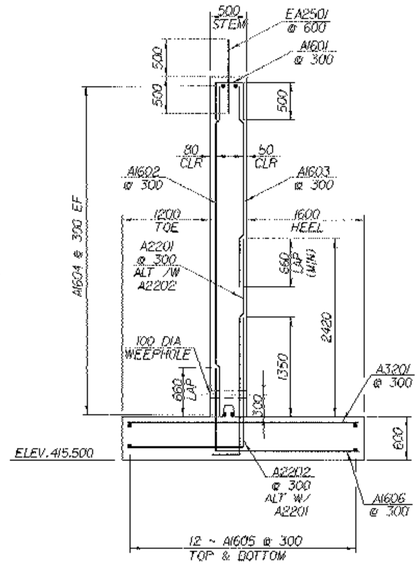

TYPICAL ABUTMENT SECTION

0 1 2 3 4

SCALE = 1:40

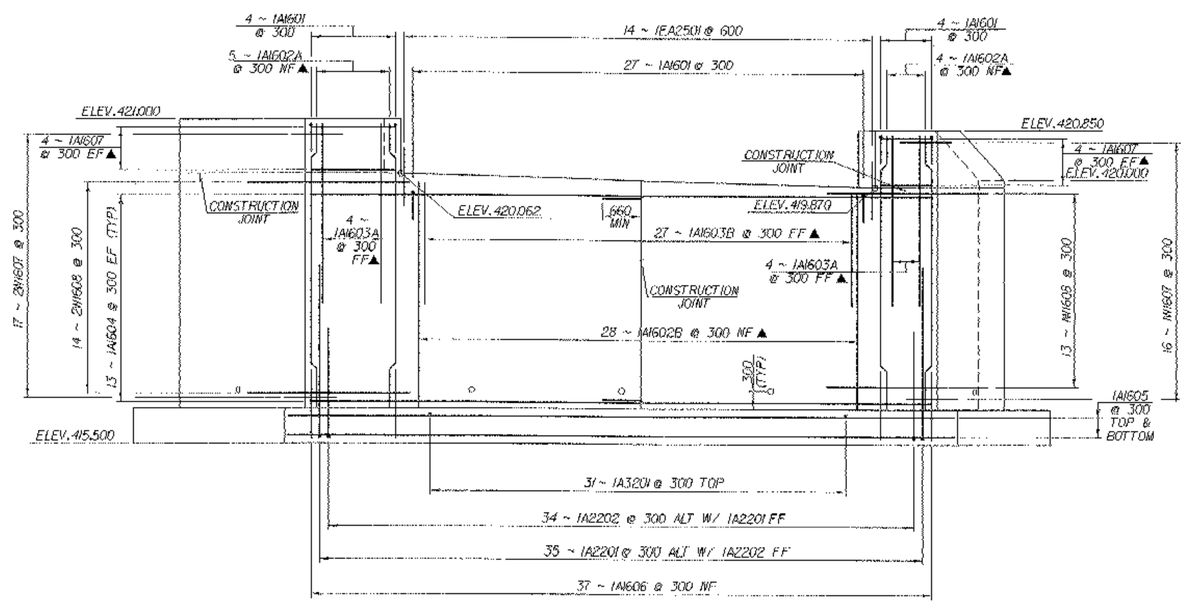

ABUTMENT NO. 1 ELEVATION

0 1 2 3 4 5

SCALE = 1:50

NOTE:

NF - NEAR FACE
FF - FAR FACE
EF - EACH FACE
▲ - CUT TO FIT IN FIELD
80 CLR. UNLESS OTHERWISE SPECIFIED ON THE PLANS.

STATE OF VERMONT
AGENCY OF TRANSPORTATION

Town Of	MENDON	Bridge No.	20
Highway No.	TH 7	Log Sta. / Surv. Sta.	

ABUTMENT NO.1 DETAIL

TH 7 OVER THE MENDON BROOK

Designed By	M.E.MONGEON	Drawn By	R.H.PELLETT
Checked By	M.E.MONGEON	Date	4/98
Bridge Design Supervisor	C.KELLER	Date	4/98
PROJECT	MENDON	PROJECT NO.	BRO 1443 (28)

I.G.S. Info. /str5/93f022/sj022abdgn sj022abd.1

Bridge Sheet No. Sheet 22 of 66

PLOTTED 5-JUN-1998

ITEM	NO. PIECES	SIZE	LENGTH	MARK	TYPE	A	B	C	D	E	F	G	H	J	K	R	O
	DECK																
▲✳	10	16	11 920	ES1601	STR			PRECAST									
▲△	42	19	8100	ES1901	STR												
△	82	16	3120	ES1602	S6	400	410	1500	410			400					
▲△	49	29	12 180	ES2901	L	375	11 805										
	ABUTMENT NO.1																
✳▲	9	16	4820	1A1602A	STR												
▲	34	16	3830	1A1602B	STR												
▲	8	16	3060	1A1603A	STR												
▲	27	16	2120	1A1603B	STR												
	52	16	5720	1A1604	STR												
	24	16	11 380	1A1605	STR												
▲	16	16	1460	1A1607	STR												
	14	25	1000	1EA2501	STR												
✳	32	32	3140	1A3201	STR												
✳	36	16	1370	1A1601	S10		500	370	500								
	37	16	3120	1A1606	17		1180	1940	---								
	35	22	3315	1A2201	17		375	2940	---								
	36	22	3440	1A2202	17		1570	1870	---								
	WINGWALL NO.1																
	7	16	4670	NW1602	STR												
	7	16	2580	NW1603	STR												
	32	16	2130	NW1604	STR												
	10	16	1180	NW1605	STR												
	17	16	2990	NW1606	STR												
✳	14	25	3040	NW2501	STR												
	7	16	1370	NW1601	S10		500	370	500				520	---	300	---	
	16	16	1200	NW1607	22		600	600	---				330	330	570	570	
	13	16	3370	NW1608	22		660	2050	660				350	---	620	---	
	2	16	2270	NW1609	22		710	1560	---								
	7	22	4540	NW2201	17		1270	3270	---								
	7	25	2650	NW2502	17		430	2220	---								
	WINGWALL NO.2																
	14	16	4820	2W1602	STR												
	14	16	2730	2W1603	STR												
	34	16	4130	2W1604	STR												
	17	16	1180	2W1605	STR												
	17	16	4930	2W1606	STR												
	27	25	3040	2W2501	STR												
	14	16	1370	2W1601	S10		500	370	500								
	17	16	1200	NW1607	22		600	600	---				520	---	300	---	
	14	16	3370	NW1608	22		660	2050	660				330	330	570	570	
	14	22	4540	2W2201	17		1270	3270	---								
	14	25	2650	2W2502	17		430	2220	---								

ITEM	NO. PIECES	SIZE	LENGTH	MARK	TYPE	A	B	C	D	E	F	G	H	J	K	R	O
	ABUTMENT NO.2																
▲	8	16	5020	2A1602A	STR												
▲	34	16	4060	2A1602B	STR												
▲	6	16	3260	2A1603A	STR												
▲	28	16	2300	2A1603B	STR												
	52	16	5610	2A1604	STR												
	24	16	11 200	2A1605	STR												
▲	16	16	1450	2A1607	STR												
	14	25	1000	2EA2501	STR												
✳	32	32	3140	2A3201	STR												
	34	16	1370	2A1601	S10		500	370	500								
	36	16	3120	2A1606	17		1180	1940	---								
✳	35	22	3310	2A2201	17		370	2940	---								
	36	22	3440	2A2202	17		1570	1870	---								
	WINGWALL NO.3																
	19	16	4820	3W1602	STR												
	19	16	2730	3W1603	STR												
	34	16	5600	3W1604	STR												
	22	16	1180	3W1605	STR												
	17	16	6440	3W1606	STR												
	36	25	3040	3W2501	STR												
	19	16	1370	3W1601	S10		500	370	500								
	17	16	1200	3W1607	22		600	600	---				490	---	345	---	
	14	16	3140	3W1608	22		660	1820	660				305	305	585	585	
	19	22	4540	3W2201	17		1270	3270	---								
	18	25	2650	3W2502	17		430	2220	---								
	WINGWALL NO.4																
▲	7	16	5020	4W1602	STR												
▲	7	16	2930	4W1603	STR												
▲	34	16	2130	4W1604	STR												
	10	16	1180	4W1605	STR												
	17	16	2990	4W1606	STR												
	13	25	3040	4W2501	STR												
✳	8	16	1370	4W1601	S10		500	370	500								
	17	16	1200	4W1607	22		600	600	---				520	---	300	---	
	14	16	3370	4W1608	22		660	2050	660				330	330	570	570	
	2	16	2270	4W1609	22		710	1560	---				350	---	620	---	
✳	8	22	4540	4W2201	17		1270	3270	---								
✳	8	25	2650	4W2502	17		430	2220	---								

NOTES

1. UNLESS OTHERWISE DESIGNATED, ALL BAR REINFORCEMENT FOR CONCRETE IN SIZES UP TO AND INCLUDING 55M SHALL CONFROM TO THE REQUIREMENT OF THE "SPECIFICATIONS FOR DEFORMED BILLET-STEEL BARS FOR CONCRETE REINFORCEMENT", AASHTO M 31M (ASTM A 615M-S1). ALL BARS SHALL BE GRADE 400, UNLESS OTHERWISE DESIGNATED.
2. FOR TYPICAL BENDING DETAILS, RECOMMENDED PIN DIAMETER "D" OF BENDS AND HOOKS, AND OTHER STANDARD PRACTICE, SEE CURRENT CONCRETE REINFORCING STEEL INSTITUTE "MANUAL OF STANDARD PRACTICE".
3. BARS WHICH REQUIRE MORE ACCURATE BENDING THAN STANDARD PRACTICES SHOULD HAVE LIMITS INDICATED.
4. ALL DIMENSIONS ARE OUT TO OUT OF BAR EXCEPT "A" AND "G" ON STANDARD 180 DEGREE AND 135 DEGREE HOOKS.
5. "J" DIMENSION ON 180 DEGREE HOOKS ARE TO BE SHOWN ONLY WHEN NECESSARY TO RESTRICT HOOK SIZE. OTHERWISE, STANDARD HOOKS ARE TO BE USED.
6. "H" DIMENSION ON STIRRUPS ARE TO BE SHOWN ONLY WHEN NECCESSARY TO MAINTAIN CLEARANCES.
7. WHERE SLOPE DIFFERS FROM 45 DEGREES, DIMENSIONS "H" AND "K" MUST BE SHOWN.
8. ▲ DENOTES BARS TO BE CUT IN FIELD.
9. ✳ DENOTES ONE EXTRA BAR ADDED FOR TESTING PURPOSES.
10. △ DENOTES TWO EXTRA BARS ADDED FOR TESTING PURPOSES.
11. "E" IN PREFIX DENOTES EPOXY COATED REINFORCING STEEL.

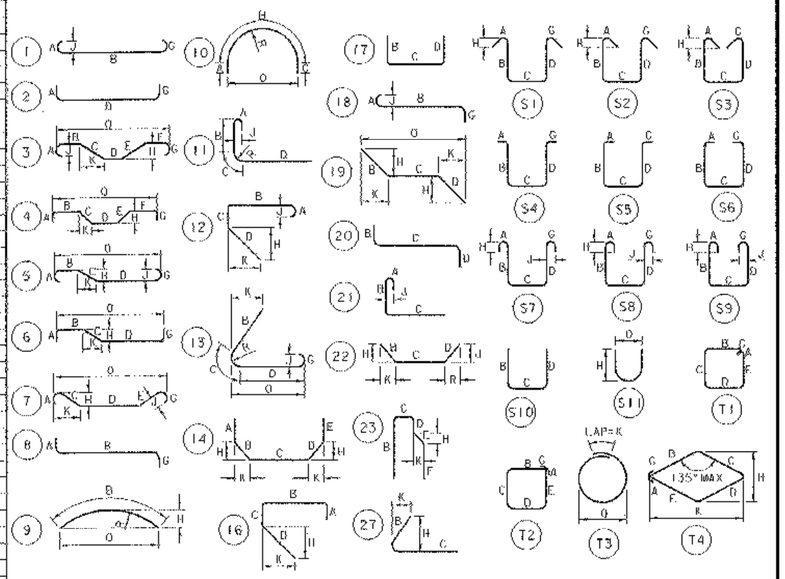

ASTM STANDARD REINFORCING BARS

BAR SIZE DESIGNATION	NOMINAL MASS kg/m	NOMINAL DIMENSIONS ROUND SECTION: DIAMETER mm	CROSS SECTIONAL AREA mm²	PERIMETER mm
10	0.560	9.5	71	29.84
13	0.994	12.7	129	39.90
16	1.552	15.9	199	49.95
19	2.235	19.1	284	60.00
22	3.042	22.2	387	69.74
25	3.973	25.4	510	79.80
29	5.060	28.7	645	90.16
32	6.404	32.3	819	101.47
36	7.907	35.8	1006	112.47
43	11.380	43.0	1452	135.09
57	20.240	57.3	2581	180.01

STATE OF VERMONT
AGENCY OF TRANSPORTATION

Town of MENDON	Bridge No. 20
Highway No. TH 7	Log Sta.
	Surv. Sta.

REINFORCING STEEL SCHEDULE

TH 7 OVER THE MENDON BROOK

Designed By M.E.MONGEON	Drawn By R.R.PELLETT
Checked By M.E.MONGEON Date 4/98	Bridge Design Supervisor C.KELLER Date 4/98
PROJECT MENDON	PROJECT NO. BRO 1443 (28)
I.C.C. Info. /str5/93J022/sJ022abut.dgn	sJ022abut.J
Bridge Sheet No.	Sheet 26 of 66

PLOTTED 5-JUN-1998

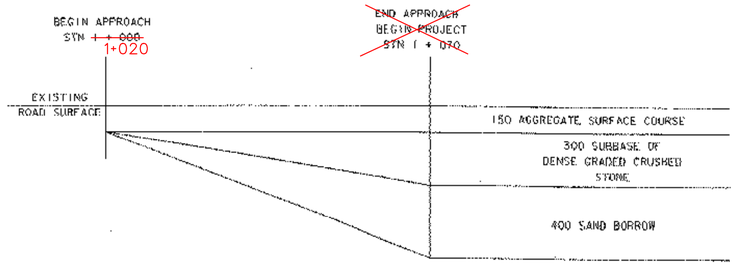

SUBBASE TRANSITION
AT BEGIN APPROACH

NTS

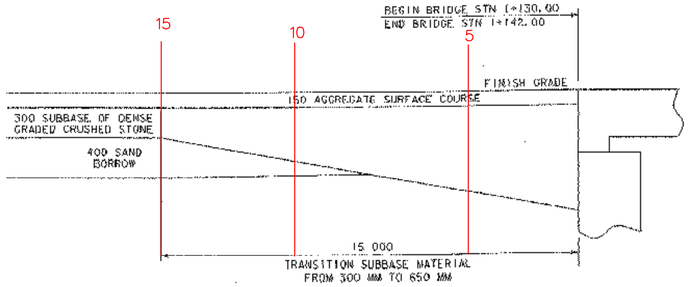

MATERIAL TRANSITION
AT BEGIN/END BRIDGE #20

NTS

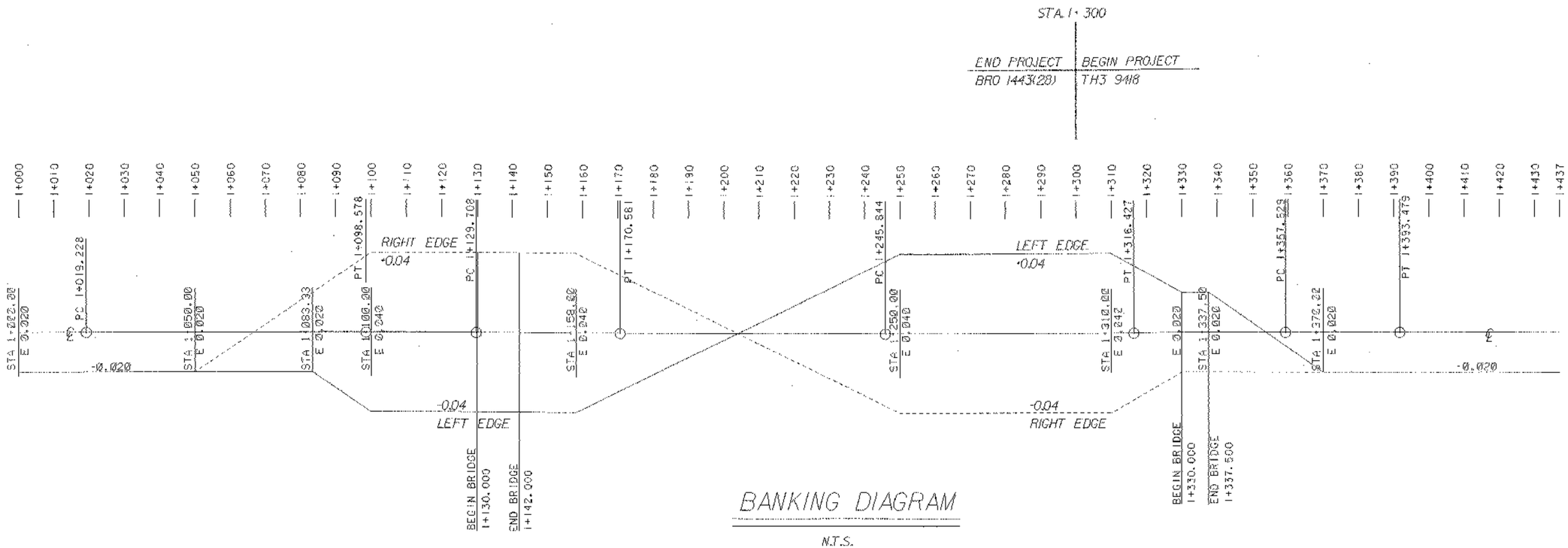

BANKING DIAGRAM

N.T.S.

PROJECT: MENDON	PROJECT NO.: BRO 1443(28) & TH 3 9418
DESIGN FILE NAME: /USR/STRI/93J022/SJ022XSI.DGN PARM FILE NAME: SJ022BAN.I	PLOT DATE: 5-JUN-1998
BANKING AND TRANSITION DIAGRAMS	SHEET: 27 OF 66

BRIDGE QUANTITY SHEET

Metric

ITEM NO.	ITEM	UNIT	QUANTITY BREAKDOWN						TOTAL	FINAL
			ROADWAY	CHANNEL	SUPER-STRUCTURE	ABUT. 1	ABUT. 2	EROSION CONTROL		
201.10	CLEARING AND GRUBBING (INCLUDING INDIVIDUAL TREES & SHRUBS)	LS	0.40						0.40	
203.15	COMMON EXCAVATION	m^3	160						160	
203.31	SAND BORROW	m^3	370						370	
203.32	GRANULAR BORROW	m^3	50						50	
204.20	TRENCH EXCAVATION OF EARTH	m^3						10	10	
204.30	GRANULAR BACKFILL FOR STRUCTURES	m^3				130	150		280	
204.40	COFFERDAMS (STA 1+330)	LS				1			1	
204.40	COFFERDAMS (STA 1+337.5)	LS					1		1	
301.35	SUBBASE DENSE GRADED CRUSHED STONE	m^3	290					20	310	
401.10	AGGREGATE SURFACE COURSE	m^3	170						170	
501.25	CONCRETE, CLASS B	m^3			PRECAST DECK~~25~~	68	53		146	
507.15	REINFORCING STEEL	kg				4840	3780		8620	
507.17	EPOXY COATED REINFORCING STEEL	kg			2070	50	50		2170	
514.10	WATER REPELLENT	L			19	9	8		36	
525.41	BRIDGE RAILING - HDSB/FASCIA MOUNTED (TYPE D)	m			19.1				19.1	
529.15	REMOVAL OF STRUCTURE (STA 1+334)	EA	1						1	
608.25	ALL PURPOSE EXCAVATOR RENTAL, TYPE I	HR						1	1	
613.10	STONE FILL, TYPE I	m^3						10	10	
613.32	STONE FILL, TYPE III	m^3		160					160	
621.21	HEAVY DUTY STEEL BEAM GUARD RAIL (TYPE IV)	m	78.4						78.4	
621.60	ANCHOR FOR STEEL BEAM GUARD RAIL	EA	4						4	
631.10	FIELD OFFICE-ENGINEERS	LS	0.40						0.40	
631.16	TESTING EQUIPMENT - CONCRETE	LS	0.40						0.40	
631.25	FIELD OFFICE TELEPHONE (NABI)*	LS	0.40						0.40	
635.10	MOBILIZATION	LS	0.40						0.40	
649.31	GEOTEXTILE UNDER STONE FILL	m^2		160					160	
649.51	GEOTEXTILE FOR SILT FENCE	m^2						120	120	
649.61	GEOTEXTILE FOR FILTER CURTAINS	m^2						80	80	
651.15	SEED	kg						15	15	
651.17	SEED - WINTER RYE	kg						5	5	
651.18	FERTILIZER	kg						100	100	
651.20	AGRICULTURAL LIMESTONE	T						1	1	
651.25	HAY MULCH	T						1	1	
651.26	HAY BALES FOR EROSION CONTROL	EA						50	50	
651.35	TOPSOIL	m^3						30	30	
651.40	GRUBBING MATERIAL	m^2		50					50	
654.10	EROSION MATTING	m^2						10	10	

BRIDGE(S) AT STATION(S): STA. 1+330.000
LOCATION(S): OVER BREWERS BROOK

PREPARED BY: M. EVANS-MONGEON
CHECKED BY: R. PELLETT
SUPERVISOR: C. KELLER

PROJECT: MENDON
PROJECT NO: TH 3 - 9418
BR 43 OF 66
SHEET NO: 43 OF 66

EARTHWORK SUMMARY

COMMON EXCAVATION (ROADWAY)	m^3	158
PLANIMETERED FILL	m^3	217
FACTOR (1.15)	m^3	33
PLANIMETERED FILL INCLUDING FACTOR	m^3	250
MATERIALS AVAILABLE FOR FILLS		
COMMON EXCAVATION (158 * 1.0)	m^3	158
COFFERDAM EXCAVATION (483 * 0.3)	m^3	145
TOTAL MATERIAL AVAILABLE FOR FILL	m^3	303
TOTAL FILL INCLUDING FACTOR	m^3	250
TOTAL MATERIAL AVAILABLE FOR FILL	m^3	303
BORROW	m^3	---
EXCESS FILL	m^3	53

* NABI = NOT A BID ITEM

TEMPORARY EROSION CONTROL (INCLUDED UNDER EROSION CONTROL)

204.20	TRENCH EXCAVATION OF EARTH	m^3	10
301.35	SUBBASE OF DENSE GRADED CRUSHED STONE	m^3	20
608.25	ALL PURPOSE EXCAVATION RENTAL TYPE I	HR	1
613.10	STONE FILL TYPE I	m^3	10
649.51	GEOTEXTILE FOR SILT FENCE	m^2	120
649.61	GEOTEXTILE FOR FILTER CURTAINS	m^2	80
651.17	SEED WINTER RYE	kg	5
651.26	HAYBALES FOR EROSION CONTROL	EA	50
654.10	EROSION MATTING	m^2	10

Curve #4

Radius:	100.000
Delta:	20°35'53.8"L
Length:	35.951
Tangent:	18.172
Chord:	35.757
Ordinate:	1.611
External:	1.638
2T-L:	0.393

525.41 BRIDGE RAILING - HD STEEL BEAM/FASCIA MOUNTED, TYPE D

STN 1+327.8 - 1+337.3 LT.
STN 1+330.4 - 1+339.9 RT.

621.21 HEAVY DUTY STEEL BEAM GUARD RAIL, TYPE 4

STN 1+305.0 - 1+327.8 LT.
STN 1+337.3 - 1+350.5 LT.
STN 1+327.0 - 1+330.4 RT.
STN 1+339.9 - 1+351.0 RT.

621.60 ANCHOR FOR STEEL BEAM GUARD RAIL

STN 1+307.1 LT
STN 1+327.2 RT.
STN 1+348.3 LT.
STN 1+348.9 RT.

DRIVE
STN 1+324. RT

UNDERDRAIN
STN 1+375

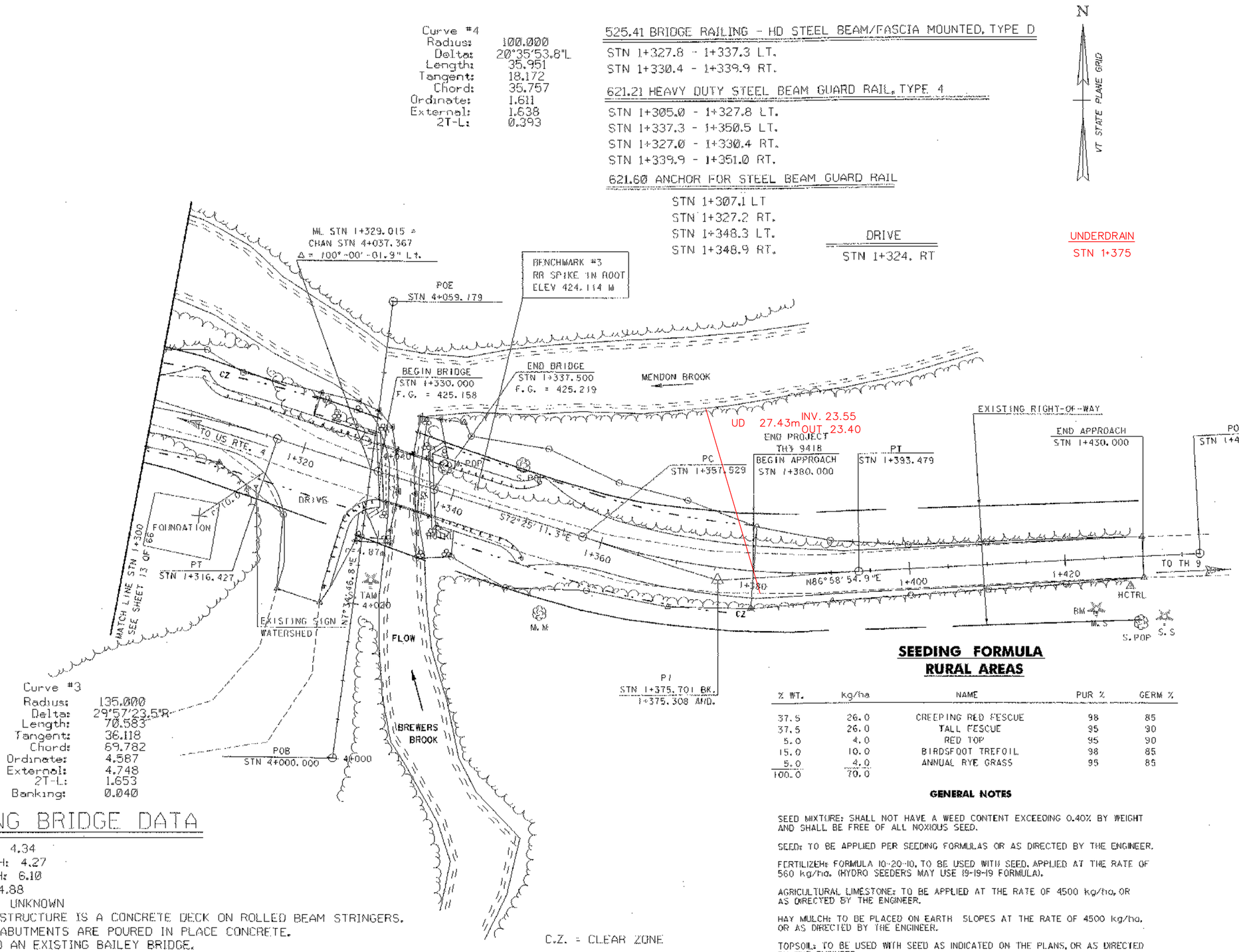

Curve #3

Radius:	135.000
Delta:	29°57'23.5"R
Length:	70.583
Tangent:	36.118
Chord:	69.782
Ordinate:	4.587
External:	4.748
2T-L:	1.653
Banking:	0.040

EXISTING BRIDGE DATA

BRIDGE WIDTH: 4.34
ROADWAY WIDTH: 4.27
BRIDGE LENGTH: 6.10
CLEAR SPAN: 4.88
CLEAR HEIGHT: UNKNOWN
THE EXISTING STRUCTURE IS A CONCRETE DECK ON ROLLED BEAM STRINGERS.
THE EXISTING ABUTMENTS ARE POURED IN PLACE CONCRETE.
THERE IS ALSO AN EXISTING BAILEY BRIDGE.

0 10 20 30
SCALE IN METERS
1:250

C.Z. = CLEAR ZONE

SEEDING FORMULA
RURAL AREAS

% WT.	kg/ha	NAME	PUR %	GERM %
37.5	26.0	CREEPING RED FESCUE	98	85
37.5	26.0	TALL FESCUE	95	90
5.0	4.0	RED TOP	95	90
15.0	10.0	BIRDSFOOT TREFOIL	98	85
5.0	4.0	ANNUAL RYE GRASS	95	85
100.0	70.0			

GENERAL NOTES

SEED MIXTURE: SHALL NOT HAVE A WEED CONTENT EXCEEDING 0.40% BY WEIGHT AND SHALL BE FREE OF ALL NOXIOUS SEED.

SEED: TO BE APPLIED PER SEEDING FORMULAS OR AS DIRECTED BY THE ENGINEER.

FERTILIZER: FORMULA 10-20-10, TO BE USED WITH SEED, APPLIED AT THE RATE OF 560 kg/ha. (HYDRO SEEDERS MAY USE 19-19-19 FORMULA).

AGRICULTURAL LIMESTONE: TO BE APPLIED AT THE RATE OF 4500 kg/ha, OR AS DIRECTED BY THE ENGINEER.

HAY MULCH: TO BE PLACED ON EARTH SLOPES AT THE RATE OF 4500 kg/ha, OR AS DIRECTED BY THE ENGINEER.

TOPSOIL: TO BE USED WITH SEED AS INDICATED ON THE PLANS, OR AS DIRECTED BY THE ENGINEER.

PROJECT: MENDON	PROJECT NO.: TH 3 9418
DESIGN FILE NAME: /USR/STRI/93J022/SJ022BDR.DGN IPARM FILE NAME: SJ022LS3.I	PLOT DATE: 5-JUN-1998
PLAN SHEET	SHEET: 46 OF 66

Metric

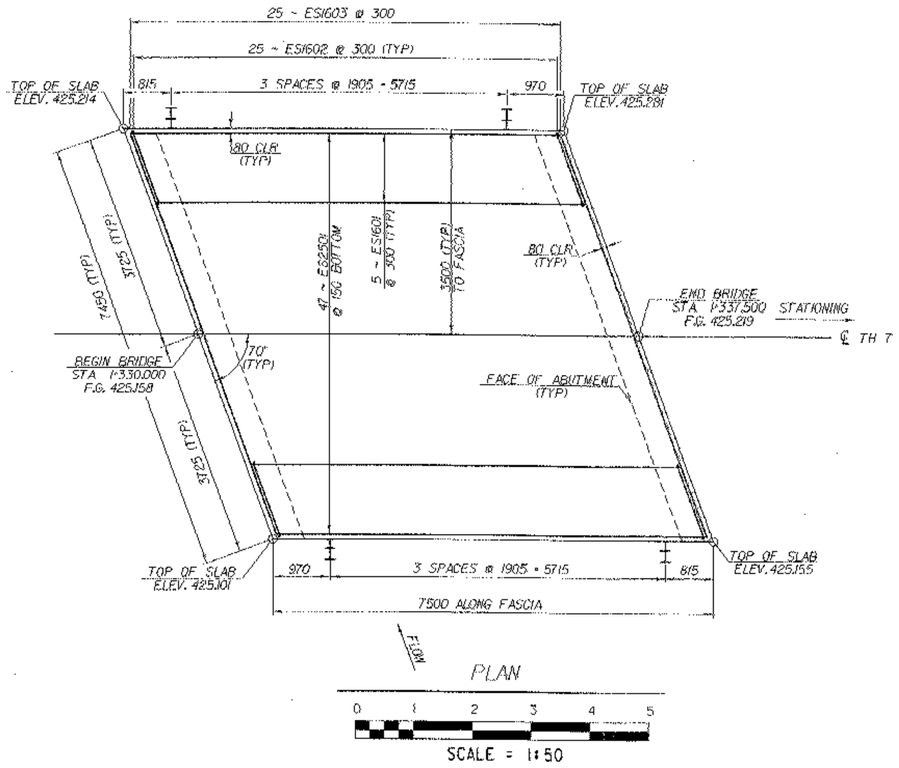

PLAN

0 1 2 3 4 5

SCALE = 1:50

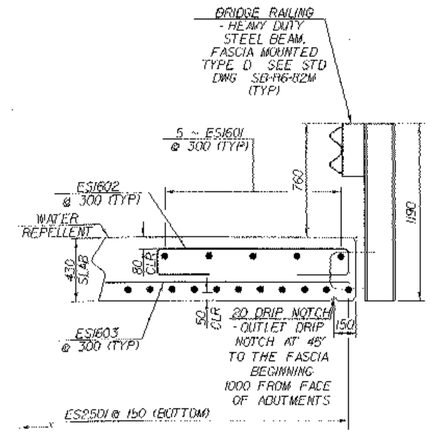

RAIL DETAIL

0 1 2

SCALE = 1:20

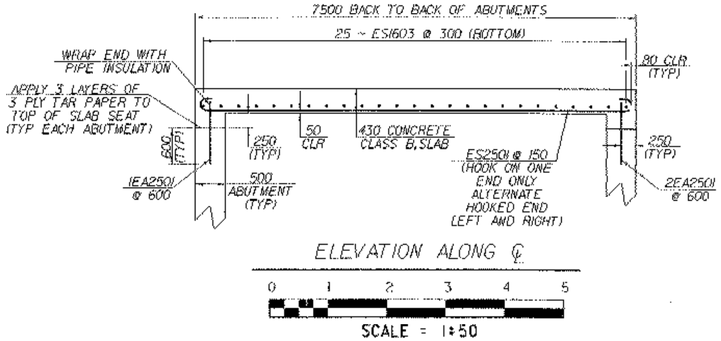

ELEVATION ALONG ℄

0 1 2 3 4 5

SCALE = 1:50

VOID: PRECAST

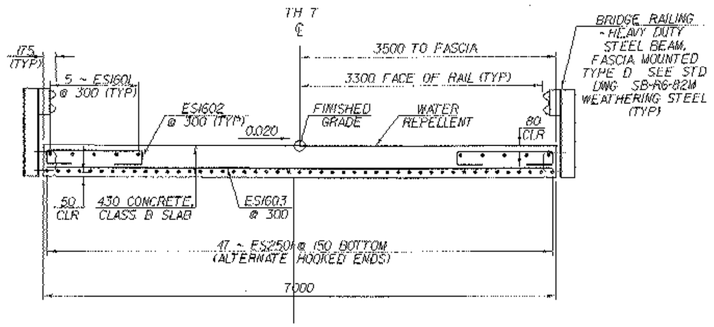

TYPICAL BRIDGE SECTION

0 1 2 3 4

SCALE = 1:40

STATE OF VERMONT
AGENCY OF TRANSPORTATION

Town Of MENDON	Bridge No. 14
Highway No. T.H.7	Log Sta. / Surv. Sta.
T.H.7 OVER BREWERS BROOK	
SLAB DETAIL SHEET	
Designed By M.EVANS-MONGEON	Drawn By R.H.PELLETT
Checked By M.EVANS-MONGEON Date 4/98	Bridge Design Supervisor C.KELLER Date 4/98
PROJECT MENDON	PROJECT NO. TH 3 9418
I.C.C. Info. /str5/941086/s1086slbdgn	s1086slb1
Bridge Sheet No.	Sheet 52 of 66

Metric

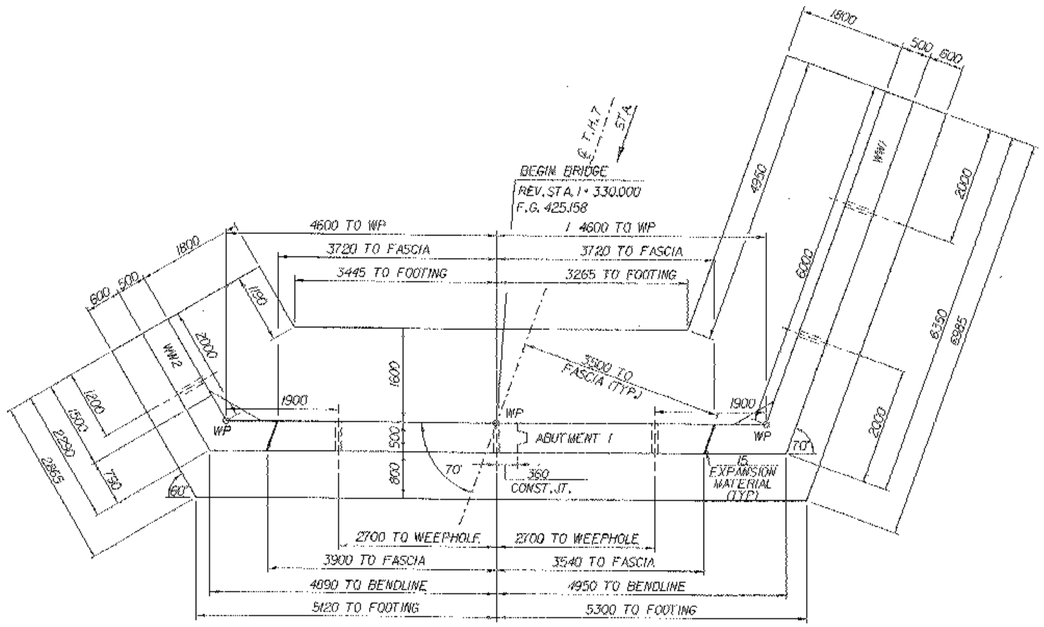

ABUTMENT NO.1 PLAN

0 1 2 3 4 5

SCALE = 1:50

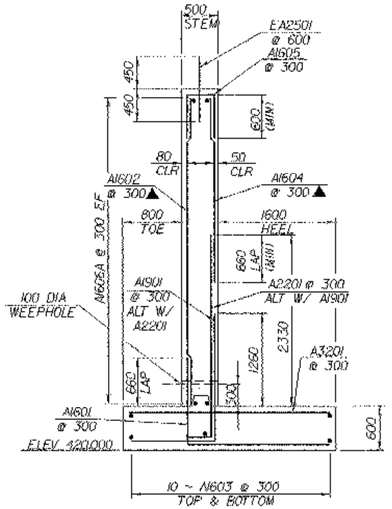

TYPICAL ABUTMENT SECTION

0 1 2 3 4

SCALE = 1:40

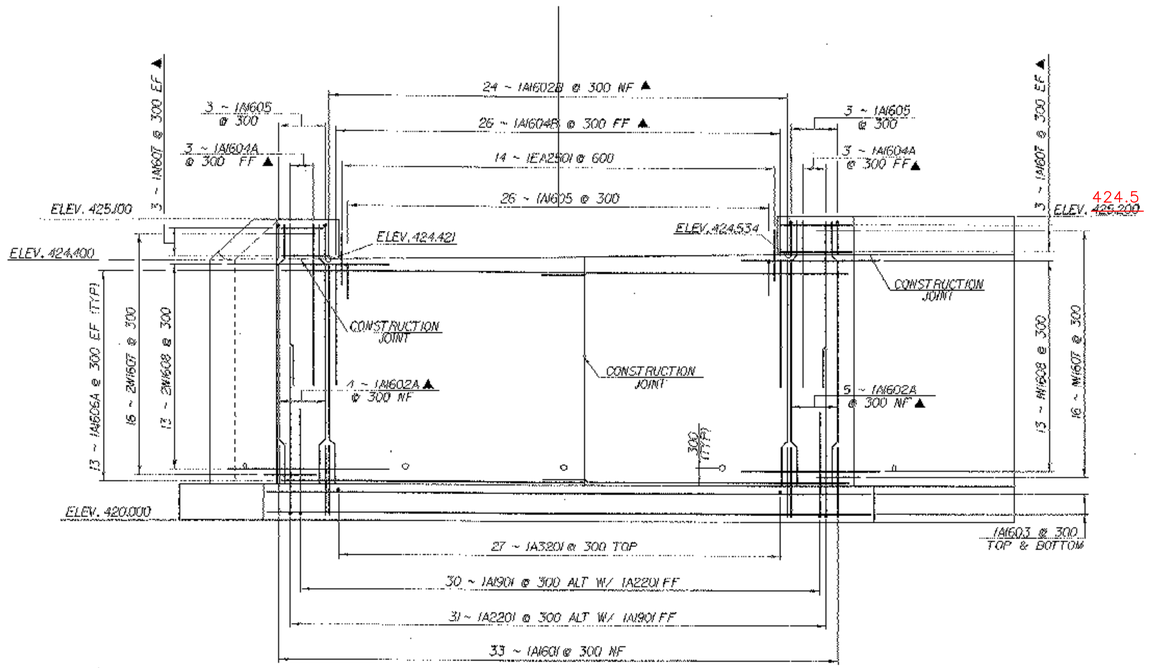

ABUTMENT NO.1 ELEVATION

0 1 2 3 4 5

SCALE = 1:50

MOD. 53A
PRECAST SLAB

NOTE:

NF - NEAR FACE
FF - FAR FACE
EF - EACH FACE
▲ - CUT TO FIT IN FIELD
80 CLR. UNLESS OTHERWISE SPECIFIED ON THE PLANS.

STATE OF VERMONT AGENCY OF TRANSPORTATION	
Town Of MENDON	Bridge No. 14
Highway No. T.H.7	Log Sta.
	Surv. Sta.
T.H.7 OVER BREWERS BROOK	
ABUTMENT NO.1 DETAILS	
Designed By M.EVANS-MONGEON	Drawn By R.H.PELLETT
Checked By M.EVANS-MONGEON Date 4/98	Bridge Design Supervisor C.KELLER Date 4/98
PROJECT MENDON	PROJECT NO. TH 3 9418
I.G.C. Info. /sh5/94J086/sJ086abdgn	sJ086abl.1
Bridge Sheet No.	Sheet 53 of 66