Metric

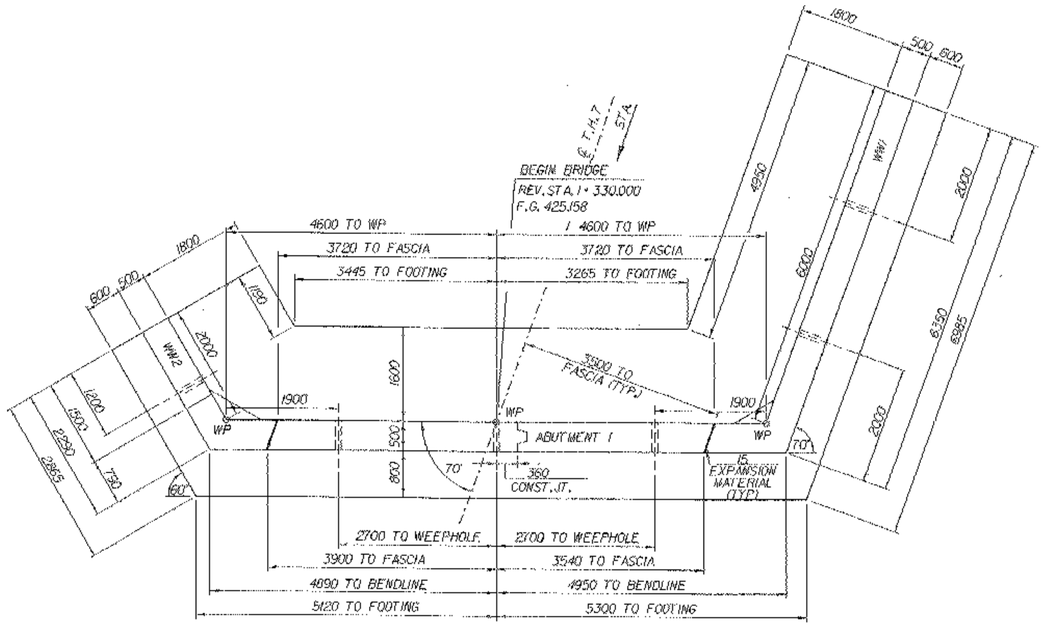

ABUTMENT NO.1 PLAN

0 1 2 3 4 5

SCALE = 1:50

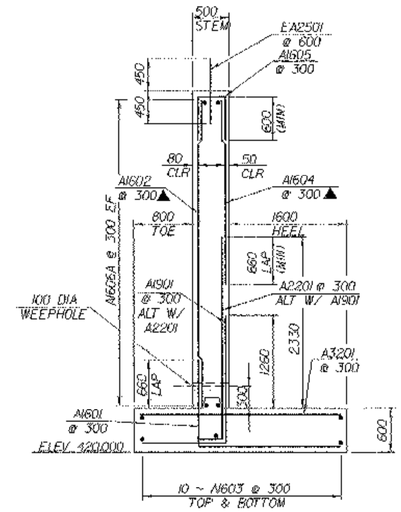

TYPICAL ABUTMENT SECTION

0 1 2 3 4

SCALE = 1:40

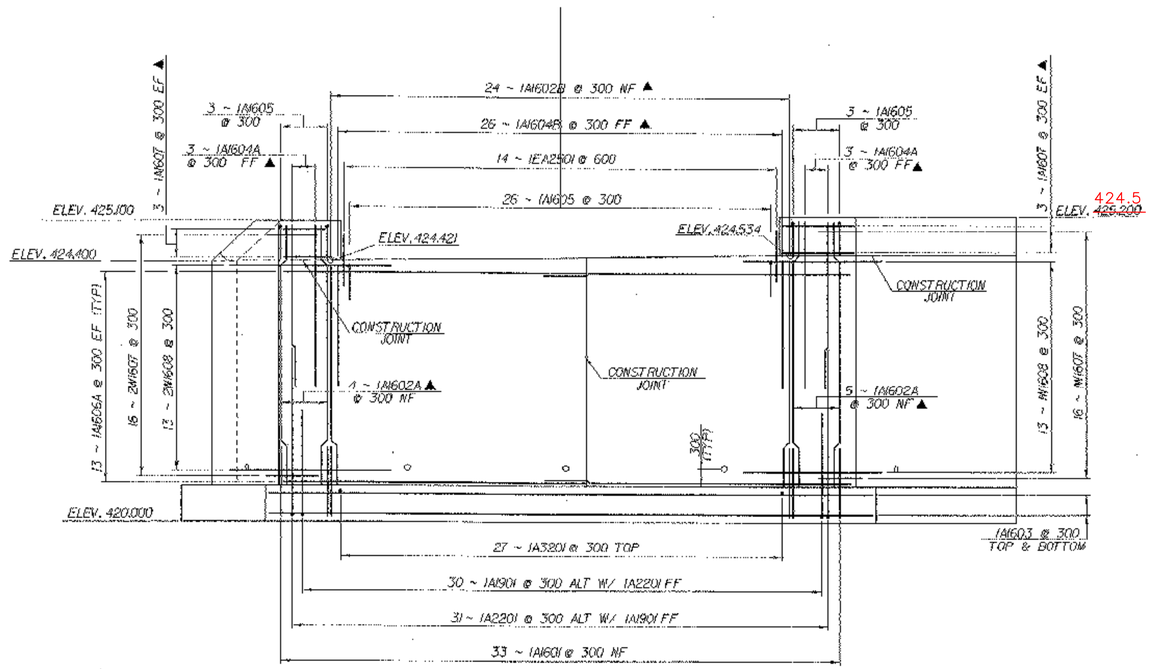

ABUTMENT NO.1 ELEVATION

0 1 2 3 4 5

SCALE = 1:50

MOD. 53A
PRECAST SLAB

NOTE:

NF - NEAR FACE
FF - FAR FACE
EF - EACH FACE
▲ - CUT TO FIT IN FIELD
80 CLR. UNLESS OTHERWISE SPECIFIED ON THE PLANS.

STATE OF VERMONT
AGENCY OF TRANSPORTATION

Town Of	MENDON	Bridge No.	14
Highway No.	T.H.7	Log Sta. / Surv. Sta.	
T.H.7 OVER BREWERS BROOK			
ABUTMENT NO.1 DETAILS			
Designed By M.EVANS-MONGEON		Drawn By R.H.PELLETT	
Checked By M.EVANS-MONGEON	Date 4/98	Bridge Design Supervisor C.KELLER	Date 4/98
PROJECT MENDON		PROJECT NO. TH 3 9418	
L.G.C. Info. /sh5/94j086/sj086abt.dgn		sj086abt.i	
Bridge Sheet No.		Sheet 53 of 66	