Metric

NOTES:

1. USE THIS SHEET IN CONJUNCTION WITH STANDARDS T1M AND T2M.
2. AN ALTERNATE EROSION CONTROL PLAN MAY BE SUBMITTED BY THE CONTRACTOR. SUBJECT TO THE APPROVAL OF THE RESIDENT ENGINEER.
3. THE CONTRACTOR WILL USE OTHER TEMPORARY OR PERMANENT EROSION CONTROL MEASURES AS REQUIRED BY THE CONSTRUCTION SEQUENCE AND THE RESIDENT ENGINEER. (SEE SECTION 105.23 OF THE VERMONT STANDARD SPECIFICATIONS FOR CONSTRUCTION. DATED 2001).
4. THE CONTRACTOR SHALL SUBMIT A PLAN FOR MAINTAINING STREAM FLOW DURING PLACEMENT OF THE PRECAST BOX UNITS PRIOR TO THE START OF THIS WORK.

REMOVAL OF EXISTING GUIDE POSTS
STA 1+010.6 RT
STA 1+013.9 LT
STA 1+020.7 LT
STA 1+027.9 LT

HEAVY DUTY STEEL BEAM GUARD RAIL
STA 0+986.0 RT - STA 1+008.2 RT
STA 1+015.8 RT - STA 1+048.8 RT
STA 1+000.9 LT - STA 1+012.0 LT
STA 1+019.6 LT - STA 1+035.3 LT

HEAVY DUTY STEEL BEAM GUARD RAIL (NESTED)
STA 1+008.2 RT - STA 1+015.8 RT
STA 1+012.0 LT - STA 1+019.6 LT

ANCHORS FOR STEEL BEAM GUARD RAIL
STA 0+987.5 RT
STA 1+002.4 LT
STA 1+046.9 RT
STA 1+033.5 LT

CONSTRUCT STONE FILL, TYPE I DITCH
STA 1~~+040.0~~ LT - STA 1~~+050~~ LT
030.7 077.7
STA 0+989.2 - 1+012 LT

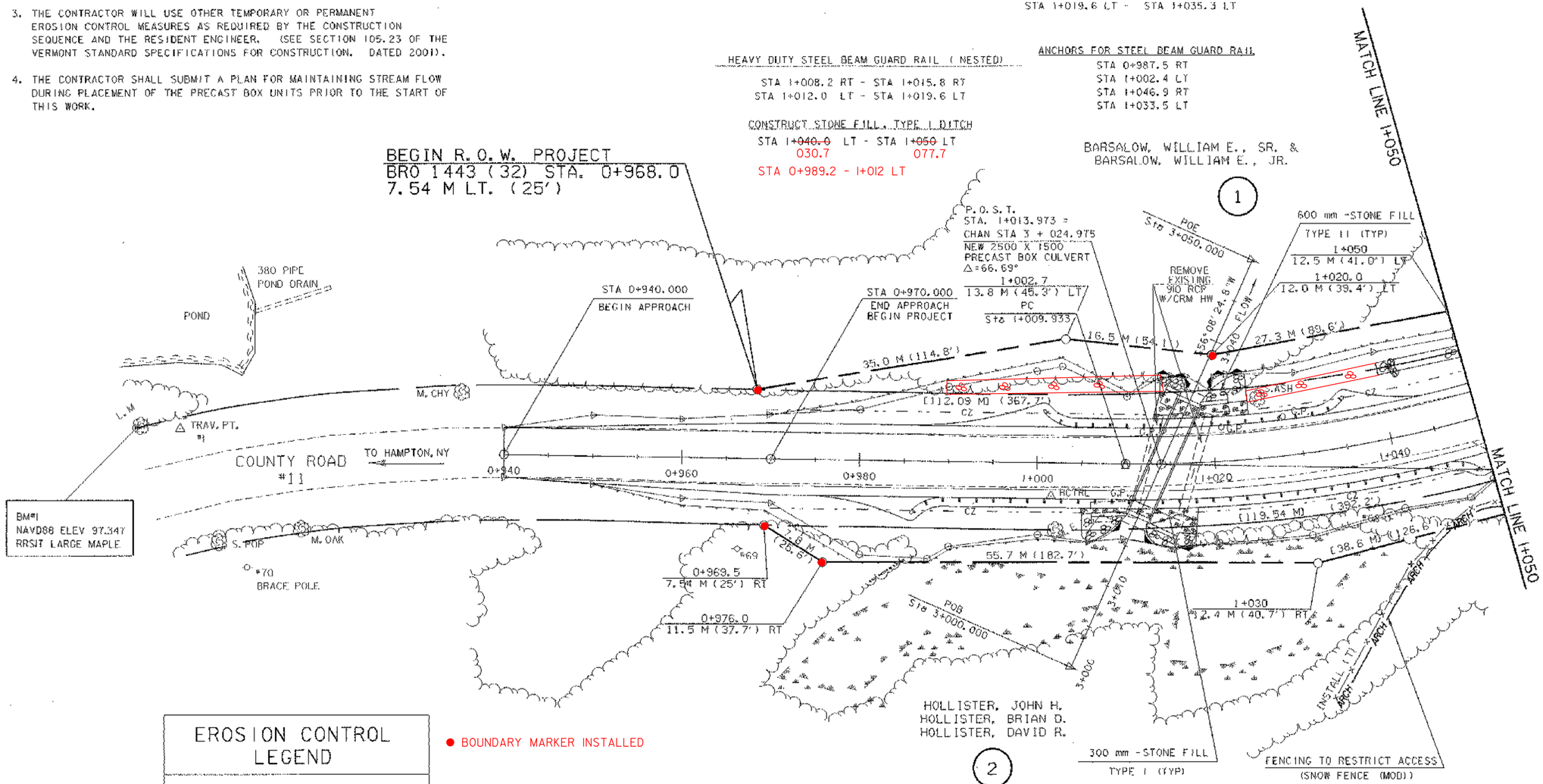

● BOUNDARY MARKER INSTALLED

TOWN OF HAMPTON, N.Y.

EROSION CONTROL LEGEND

- FILTER CURTAIN
- SILT FENCE
- ROCK CHECK DAM
- STONE FILL, TYPE I
- STONE FILL, TYPE II

0 10 20
SCALE 1:250

FOR R.O.W. USE ONLY

SHEET NAME: RIGHT-OF-WAY PLAN SHEET #1	
PROJECT NAME: FAIR HAVEN-HAMPTON	HIGHWAY NO.: TH 6
PROJECT NUMBER: BRO 1443(32)	BRIDGE NO.: 6 OVER: POULTNEY RIVER
FILE NAME: /strl/93j021/sj021bdr.dgn	PLOT DATE: 28-JAN-2003
PROJECT MANAGER: G.S. ROGERS	DRAWN BY: STRI
DESIGNED BY: C. MEUNIER	IPARM NAME: sj021row.i
R.O.W. SHEET 8 OF 9 SHEETS	SHEET 6 OF 53

Metric

REMOVAL OF EXISTING GUARD RAIL
STA 1+076 LT - STA 1+082 LT
STA 1+078 RT - STA 1+082 RT
STA 1+108 RT - STA 1+110 RT
STA 1+108 LT - STA 1+113 LT

HEAVY DUTY STEEL BEAM GUARD RAIL
STA 1+063.5 RT - STA 1+082.0 RT
STA 1+065.5 LT - STA 1+081.0 LT
STA 1+108.0 RT - STA 1+118.6 RT
STA 1+108.6 LT - STA 1+124.2 LT

BRIDGE RAILING - HEAVY DUTY STEEL BEAM FASCIA MOUNTED W/ STEEL TUBING W/ HANDRAIL
STA 1+081.2 LT - STA 1+108.6 LT
STA 1+082.0 RT - STA 1+108 RT

ANCHORS FOR STEEL BEAM GUARD RAIL
STA 1+065.5 RT
STA 1+067.5 LT
STA 1+116.6 RT
STA 1+122.2 LT

DRILLING AND BLASTING OF SUBGRADE
STA 1+130 - STA 1+150

REMOVE FENCE
STA 1+~~120~~ 125 RT - STA 1+~~160~~ 155 RT

DRIVE GATE (ALUMINUM) (MOD)
STA 1+119 RT - STA 1+125 RT
STA 1+056 RT - STA 1+063 RT

REMOVE AND RESET FENCE
STA 1+115 LT - STA 1+160 LT
STA 1+139 LT - STA 1+156.5 LT
(ELECTRIC & BARBED WIRE FENCE)

CONSTRUCT DRIVES (GRAVEL)
STA 1+059 RT
STA 1+121 RT

CONSTRUCT STONE FILL, TYPE I DITCH
STA 1+050 LT - STA 1+~~070~~ 077.7 LT
STA 1+~~127.5~~ 126.1 LT - STA 1+160 LT

NEW BARBED WIRE FENCE (2 STRANDS)
STA 1+124.5 RT - STA 1+160 RT

SOLID ROCK EXCAVATION
STA 1+110 LT - STA 1+128 LT

S.CED

END R.O.W. PROJECT
BRO 1443 (32) STA. 1+1157.4
8.5 M LT. (27.9')

HCTRL

CURVE DATA
Δ = 78.000°
R = 138.000 m
T = 111.680 m
L = 187.790 m
E = 39.530 m
BANK = 0.060

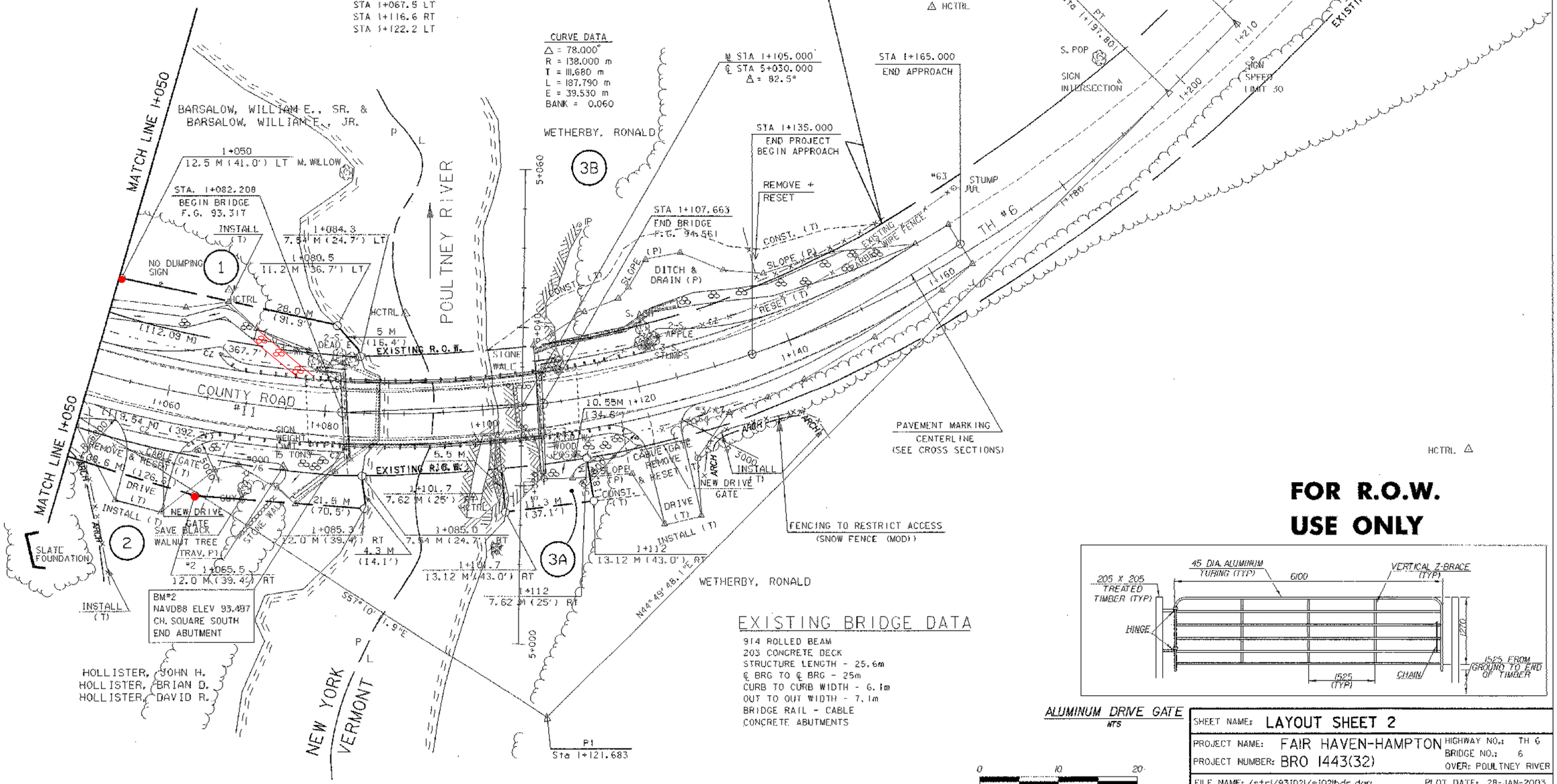

FOR R.O.W. USE ONLY

EXISTING BRIDGE DATA
914 ROLLED BEAM
203 CONCRETE DECK
STRUCTURE LENGTH - 25.6m
℄ BRG TO ℄ BRG - 25m
CURB TO CURB WIDTH - 6.1m
OUT TO OUT WIDTH - 7.1m
BRIDGE RAIL - CABLE
CONCRETE ABUTMENTS

ALUMINUM DRIVE GATE
NTS

0 10 20
SCALE 1:250

SHEET NAME: LAYOUT SHEET 2	
PROJECT NAME: FAIR HAVEN-HAMPTON	HIGHWAY NO.: TH 6
PROJECT NUMBER: BRO 1443(32)	BRIDGE NO.: 6
	OVER: POULTNEY RIVER
FILE NAME: /stri/93j021/sj021bdr.dgn	PLOT DATE: 28-JAN-2003
PROJECT MANAGER: G.S. ROGERS	DRAWN BY: STRI
DESIGNED BY: C. MEUNIER	IPARM NAME: sj021row2.i
R.O.W. SHEET 9 OF 9 SHEETS	SHEET 7 OF 53

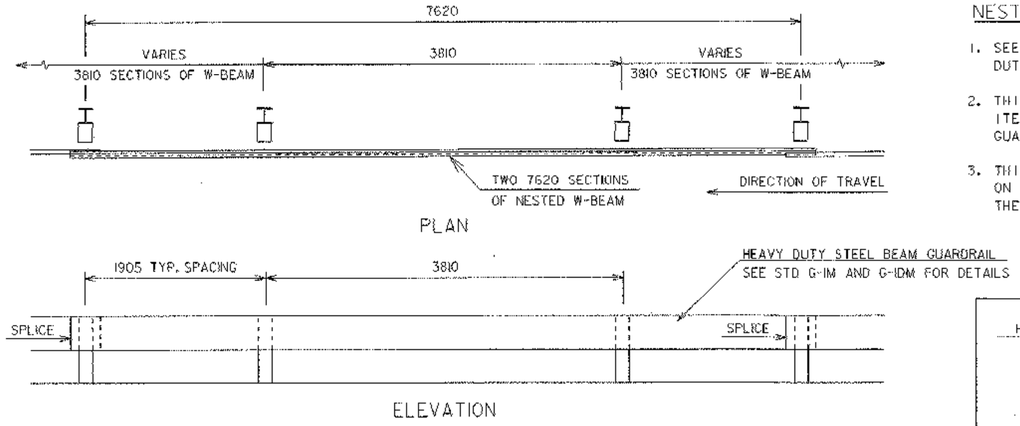

NESTED W-BEAM DETAIL

NTS

NESTED W-BEAM NOTES

1. SEE STANDARD G-1M FOR HEAVY DUTY STEEL BEAM GUARDRAIL DETAILS.
2. THIS WORK SHALL BE PAID UNDER ITEM 621.21 HEAVY DUTY STEEL BEAM GUARDRAIL AT A PAY FACTOR OF 1.0.
3. THIS DETAIL TO BE USED AS INDICATED ON THIS SHEET OR AS DIRECTED BY THE RESIDENT ENGINEER.

REMOVAL OF EXISTING GUIDE POSTS
STA 1+010.6 RT
STA 1+013.9 LT
STA 1+020.7 LT
STA 1+027.9 LT

HEAVY DUTY STEEL BEAM GUARD RAIL
STA 0+986.0 RT - STA 1+008.2 RT
STA 1+015.8 RT - STA 1+048.8 RT
STA 1+000.9 LT - STA 1+012.0 LT
STA 1+019.6 LT - STA 1+035.3 LT

HEAVY DUTY STEEL BEAM GUARD RAIL (NESTED)
STA 1+008.2 RT - STA 1+015.8 RT
STA 1+012.0 LT - STA 1+019.6 LT

ANCHORS FOR STEEL BEAM GUARD RAIL
STA 0+987.5 RT
STA 1+002.4 LT
STA 1+046.9 RT
STA 1+033.5 LT

CONSTRUCT STONE FILL, TYPE I DITCH
STA 1~~+040.0~~ 030.7 LT - STA 1+050 LT
STA 0+989.2 - 1+012 LT

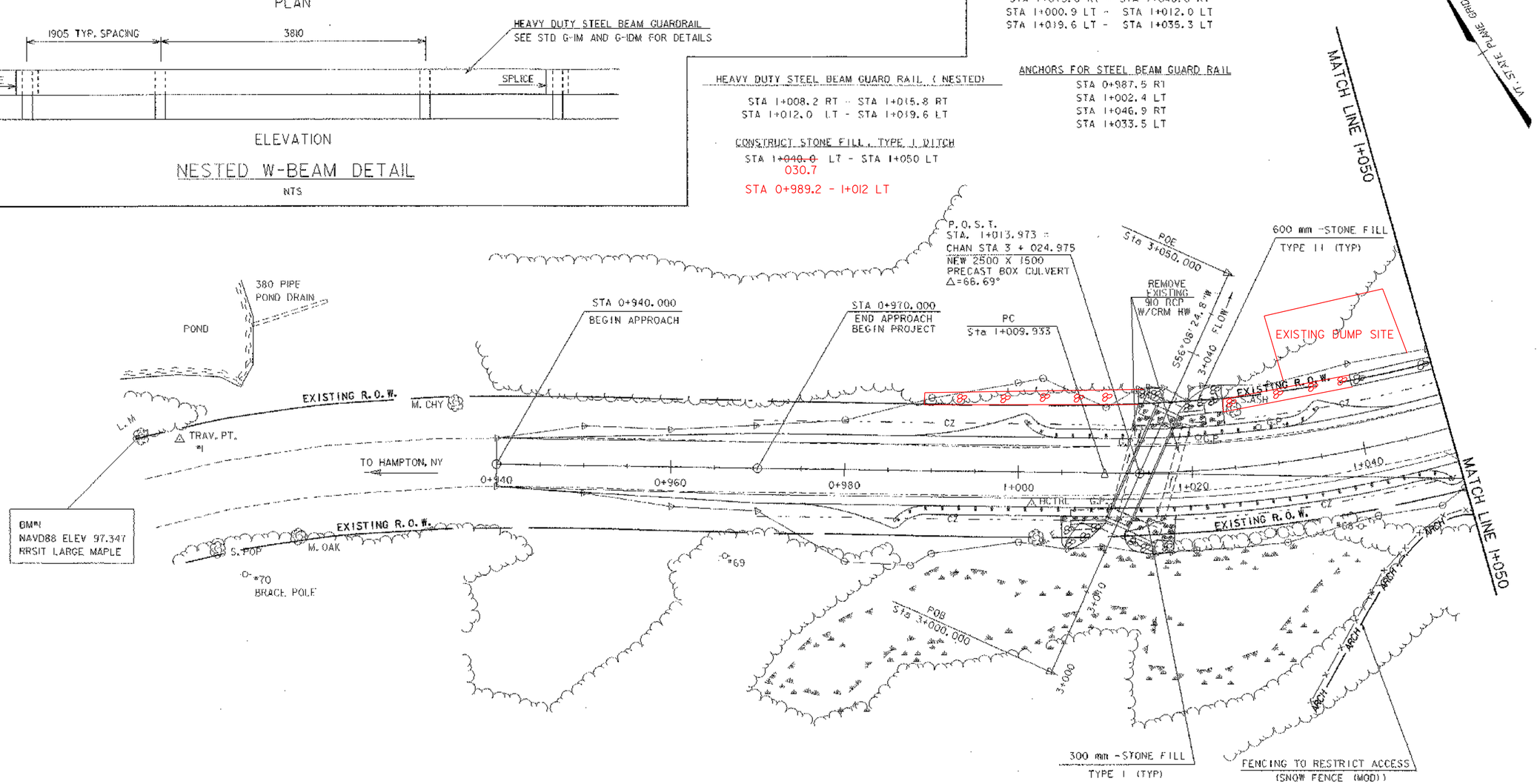

TOWN OF HAMPTON, N.Y.

0 10 20
SCALE 1:250

SHEET NAME: LAYOUT SHEET 1	
PROJECT NAME: FAIR HAVEN-HAMPTON	HIGHWAY NO.: TH 6
PROJECT NUMBER: BRO 1443(32)	BRIDGE NO.: 6
	OVER: POULTNEY RIVER
FILE NAME: /strl/93j021/sj021bdr.dgn	PLOT DATE: 28-JAN-2003
PROJECT MANAGER: G.S. ROGERS	DRAWN BY: STRI
DESIGNED BY: C. MEUNIER	IPARM NAME: sj021al.i
BRIDGE SHEET NUMBER:	SHEET 9 OF 53

Metric

REMOVAL OF EXISTING GUARD RAIL
STA 1+076 LT - STA 1+082 LT
STA 1+078 RT - STA 1+082 RT
STA 1+108 RT - STA 1+110 RT
STA 1+108 LT - STA 1+113 LT

HEAVY DUTY STEEL BEAM GUARD RAIL
STA 1+063.5 RT - STA 1+082.0 RT
STA 1+065.5 LT - STA 1+081.0 LT
STA 1+108.0 RT - STA 1+118.6 RT
STA 1+108.6 LT - STA 1+124.2 LT

BRIDGE RAILING - HEAVY DUTY STEEL BEAM FASCIA MOUNTED W/ STEEL TUBING W/ HANDRAIL
STA 1+081.2 LT - STA 1+108.6 LT
STA 1+082.0 RT - STA 1+108 RT

ANCHORS FOR STEEL BEAM GUARD RAIL
STA 1+065.5 RT
STA 1+067.5 LT
STA 1+116.6 RT
STA 1+122.2 LT

DRILLING AND BLASTING OF SUBGRADE
STA 1+110 - STA 1+150

REMOVE FENCE
STA 1+120 RT - STA 1+160 RT

DRIVE GATE (ALUMINUM) (MOD)
STA 1+119 RT - STA 1+125 RT
STA 1+056 RT - STA 1+063 RT

REMOVE AND RESET FENCE
STA 1+115 LT - STA 1+160 LT
STA 1+139 LT - STA 1+156.5 LT
(ELECTRIC & BARBED WIRE FENCE)

CONSTRUCT DRIVES (GRAVEL)
STA 1+059 RT
STA 1+121 RT

CONSTRUCT STONE FILL, TYPE I DITCH
STA 1+050 LT - STA 1+~~070~~ LT 077.7
STA 1+~~127.5~~ 126.1 LT - STA 1+160 LT

NEW BARBED WIRE FENCE (2 STRANDS)
STA 1+124.5 RT - STA 1+160 RT

SOLID ROCK EXCAVATION
STA 1+110 LT - STA 1+128 LT

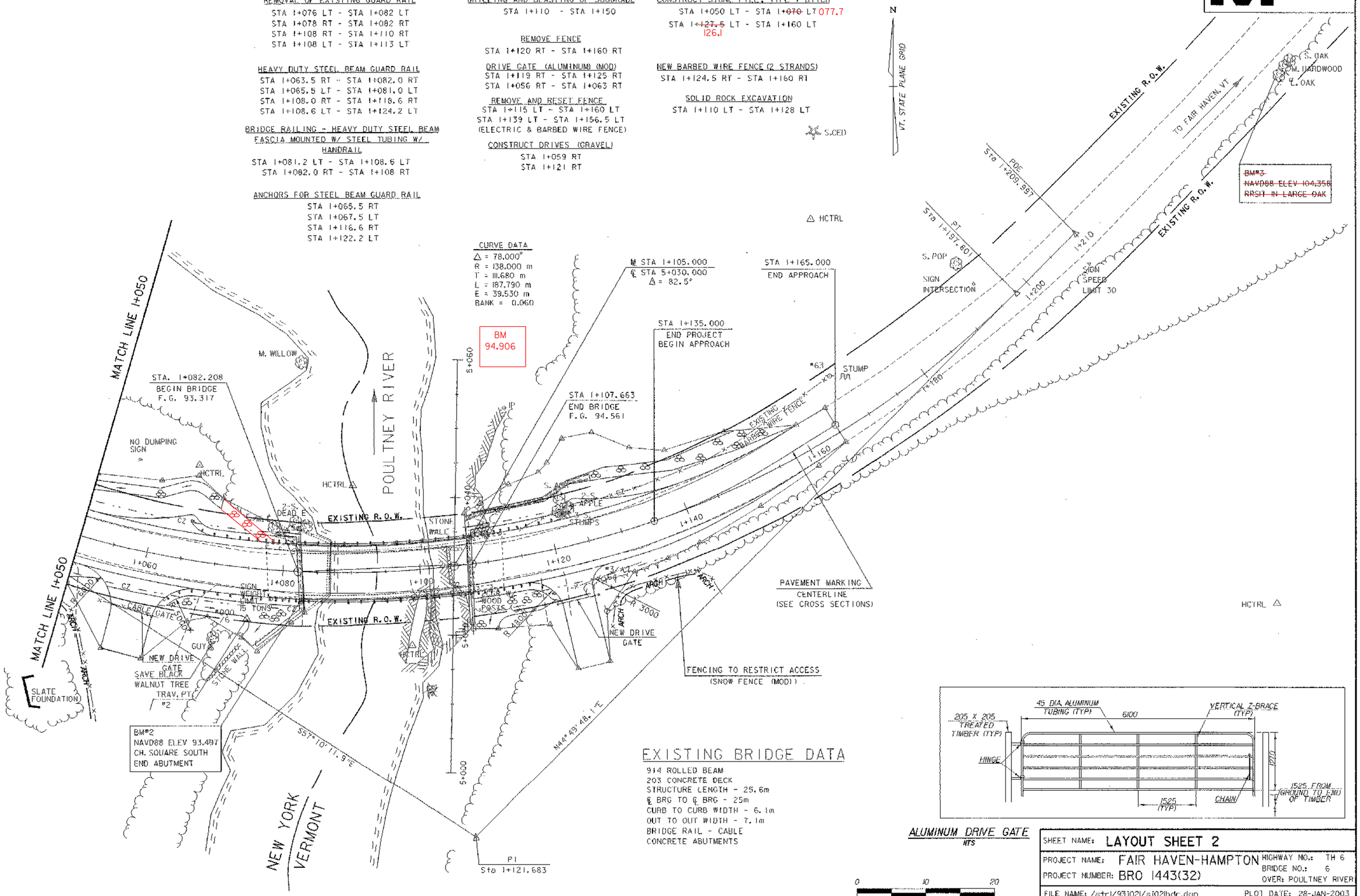

EXISTING BRIDGE DATA

914 ROLLED BEAM
203 CONCRETE DECK
STRUCTURE LENGTH - 25.6m
℄ BRG TO ℄ BRG - 25m
CURB TO CURB WIDTH - 6.1m
OUT TO OUT WIDTH - 7.1m
BRIDGE RAIL - CABLE
CONCRETE ABUTMENTS

ALUMINUM DRIVE GATE
NTS

0 10 20
SCALE 1:250

SHEET NAME: LAYOUT SHEET 2	
PROJECT NAME: FAIR HAVEN-HAMPTON	HIGHWAY NO.: TH 6
PROJECT NUMBER: BRO 1443(32)	BRIDGE NO.: 6
	OVER: POULTNEY RIVER
FILE NAME: /stri/93j021/sj021bdr.dgn	PLOT DATE: 28-JAN-2003
PROJECT MANAGER: G.S. ROGERS	DRAWN BY: STRI
DESIGNED BY: C. MEUNIER	IPARM NAME: sj021lo2.i
BRIDGE SHEET NUMBER:	SHEET 10 OF 53

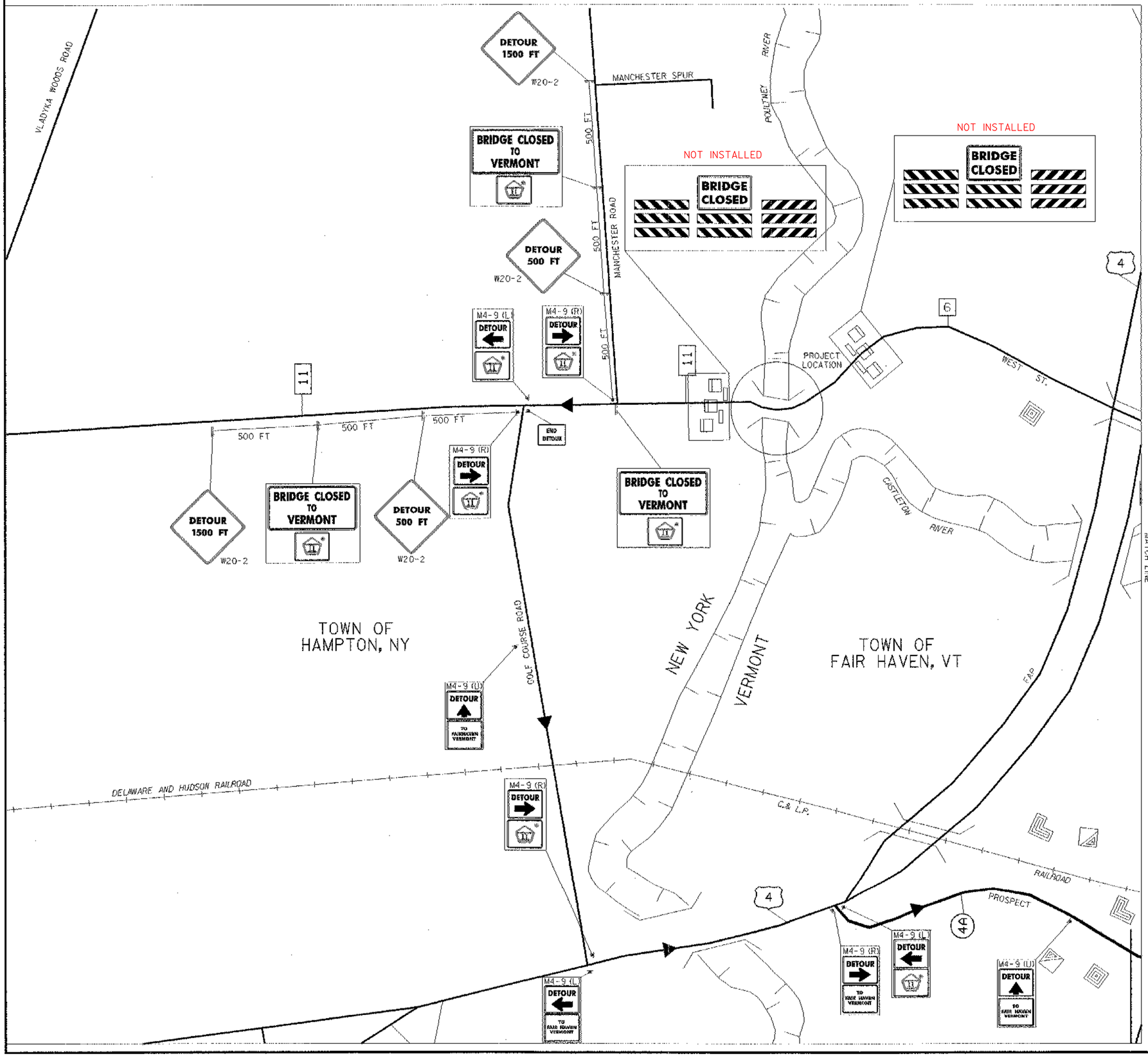

Metric

N

MAGNETIC

REQUIRED VT AOT STANDARDS

E-100
E-100AM
E-102
E-106
E-107AM
E-107M

NOTES:

CONSTRUCTION APPROACH SIGNING AS SHOWN ON AOT STANDARD DRAWINGS E-100M WILL BE REQUIRED AS WELL AS ALL THE OTHER SIGNS.

* WASHINGTON COUNTY II SIGNS TO BE PROVIDED TO THE CONTRACTOR BY WASHINGTON COUNTY, NY. CONTACT WILLY GRIMMKE, SUPERINTENDENT, WASHINGTON COUNTY @ (518) 746-2440

PLEASE NOTE: THE DETOUR HAS ENGLISH UNITS EXCEPT FOR SIGN DIMENSIONS

SHEET NAME:	TRAFFIC DETOUR SHEET #1		
PROJECT NAME: FAIR HAVEN-HAMPTON		HIGHWAY NO.: TH 6	
PROJECT NUMBER: BRO 1443(32)		BRIDGE NO.: 6	
		OVER: POULTNEY RIVER	
FILE NAME: /s-tr1/93102l/s3021hgs.dgn		PLOT DATE: 28-JAN-2003	
PROJECT MANAGER: G.S. ROGERS		DRAWN BY: J. GILMORE	
DESIGNED BY: C. MEUNIER		IPARM NAME: s3021mpb.i	
BRIDGE SHEET NUMBER:		SHEET 13 OF 53	

STATE OF VERMONT
AGENCY OF TRANSPORTATION

TRAFFIC SIGN SUMMARY SHEET

Metric

QUANTITY	SIGN LEGEND	SIGN DIMENSIONS WIDTH (mm)	SIGN DIMENSIONS HEIGHT (mm)	FLANGED CHANNEL kg/m 3.0	TOTAL AREA SIGNS (m^2)
2	DETOUR 1500 FT W20-2	1220	1220	2 POSTS	2.977
2	DETOUR 500 FT W20-2	1220	1220	2 POSTS	2.977
4	DETOUR M4-9 (R)	765	610	1 POST	1.867
4	DETOUR M4-9 (L)	765	610	1 POST	1.867
5	DETOUR M4-9 (U)	765	610	1 POST	2.333
3	BRIDGE CLOSED TO VERMONT	1525	765	2 POSTS	3.500
4	TO FAIR HAVEN VERMONT	745	610	1 POST	1.818
2	END DETOUR	600	450	1 POST	0.540
4	WEST STREET BRIDGE CLOSED TO TRAFFIC	1525	765	2 POSTS	4.667
NOT 2 INSTALLED	BRIDGE CLOSED	1525	765	1 POST	2.333
1	DETOUR TO NY	750	915	1 POST	0.686
2	DETOUR TO NY	750	915	1 POST	1.373
1	DETOUR TO NY	750	915	1 POST	0.686

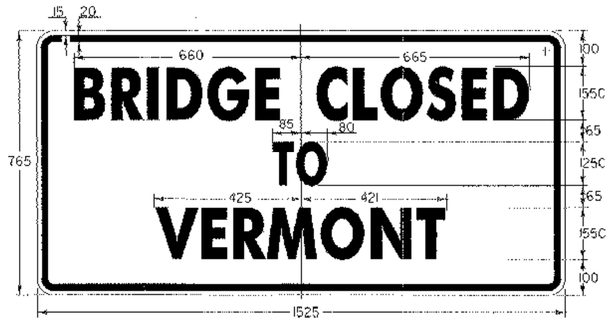

R11-4
BLACK TEXT & BORDER
WITH WHITE BACKGROUND

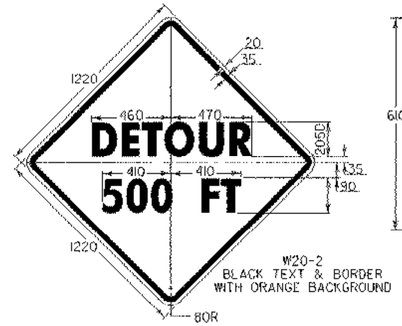

W20-2
BLACK TEXT & BORDER
WITH ORANGE BACKGROUND

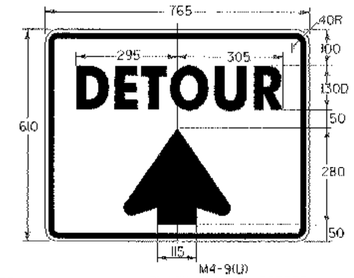

M4-9(U)
BLACK TEXT & BORDER
WITH ORANGE BACKGROUND

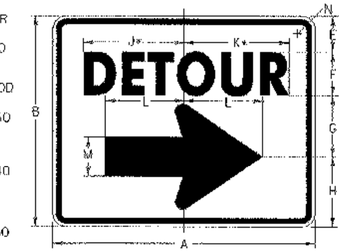

M4-9(R)
BLACK TEXT & BORDER
WITH ORANGE BACKGROUND

BLACK TEXT & BORDER
WITH ORANGE BACKGROUND

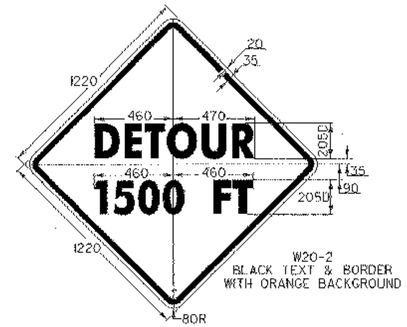

W20-2
BLACK TEXT & BORDER
WITH ORANGE BACKGROUND

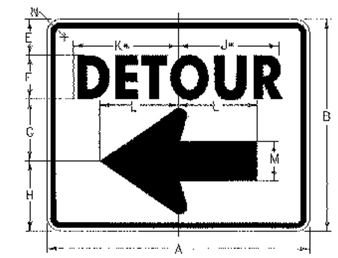

M4-9(L)
BLACK TEXT & BORDER
WITH ORANGE BACKGROUND

BLACK TEXT & BORDER
WITH WHITE BACKGROUND

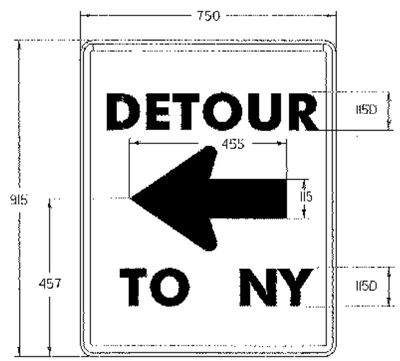

BLACK TEXT & BORDER
WITH WHITE BACKGROUND

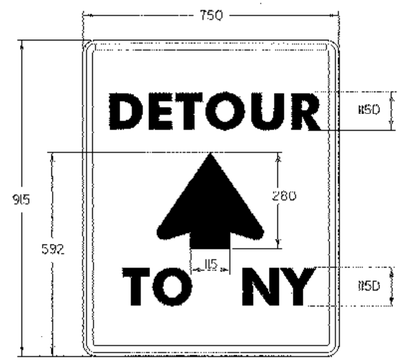

BLACK TEXT & BORDER
WITH WHITE BACKGROUND

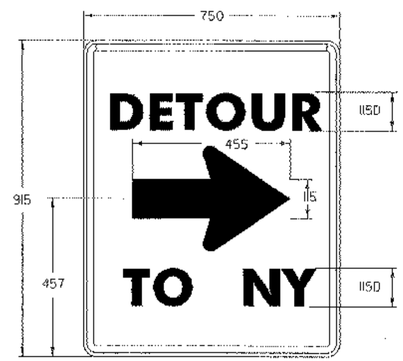

BLACK TEXT & BORDER
WITH WHITE BACKGROUND

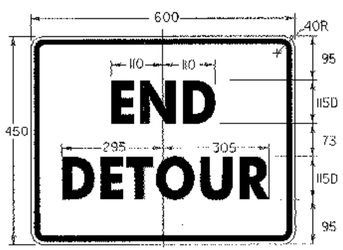

M4-8a
BLACK TEXT & BORDER
WITH ORANGE BACKGROUND

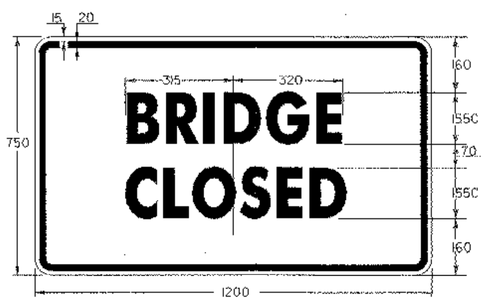

BLACK TEXT & BORDER
WITH WHITE BACKGROUND

SIGN	A	B	C	D	E	F	G	H	J	K	L	M	N
	DIMENSIONS (INCHES)								* REDUCE SPACING 40%				
STD.	765	610	10	15	100	130D	175	205	295	305	230	115	40
SPECIAL	1220	915	15	25	155	205D	255	305	495	515	345	180	60
SPECIAL	1525	1220	20	35	205	255D	355	410	585	610	460	230	80

SHEET NAME: TRAFFIC DETOUR SIGNING SHEET

PROJECT NAME: FAIR HAVEN-HAMPTON
PROJECT NUMBER: BRO 1443(32)
HIGHWAY NO.: TH 6
BRIDGE NO.: 6
OVER: POULTNEY RIVER

FILE NAME: /str1/93J021/sJ021tcs.dgn
PROJECT MANAGER: G.S. ROGERS
DESIGNED BY: C. MEUNIER
BRIDGE SHEET NUMBER:
PLOT DATE: 28-JAN-2003
DRAWN BY: J. GILMORE
IPARM NAME: sJ02tmp3.i
SHEET 15 OF 53

Metric

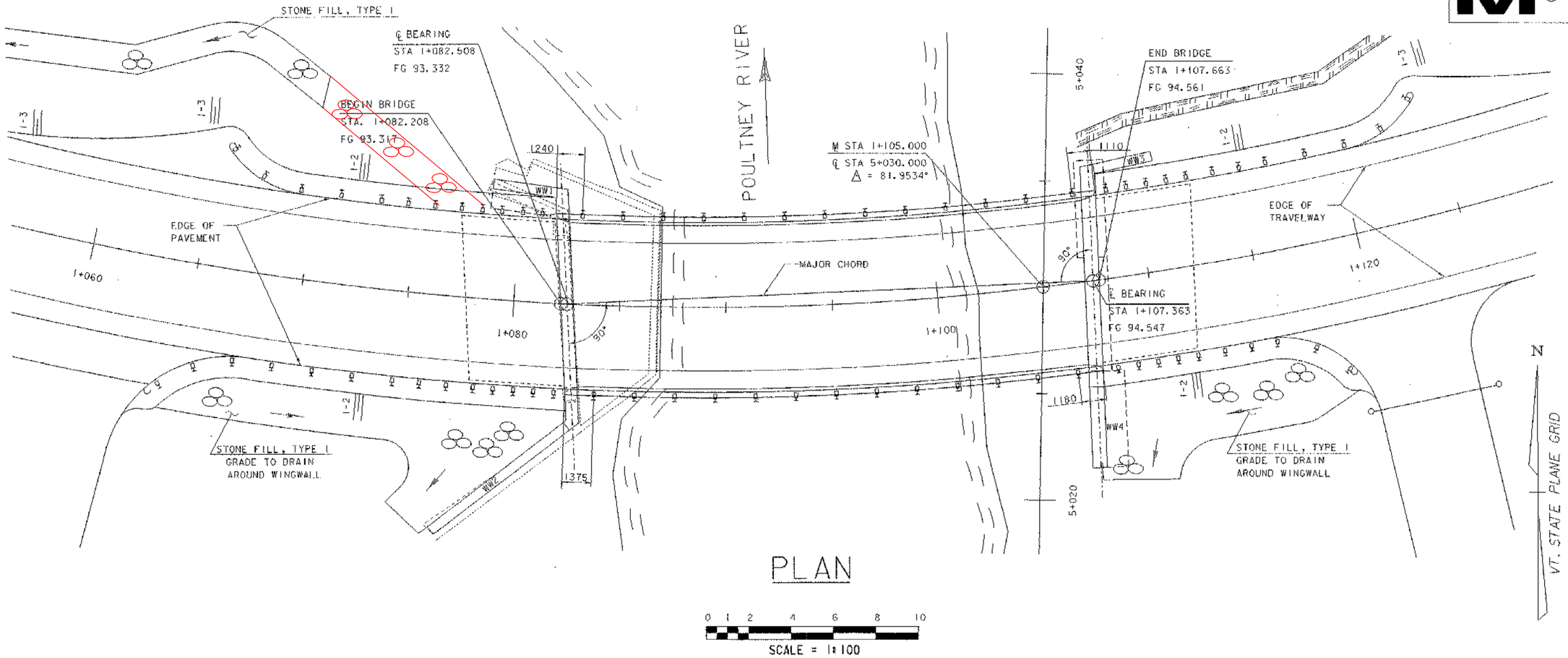

PLAN

0 1 2 4 6 8 10

SCALE = 1:100

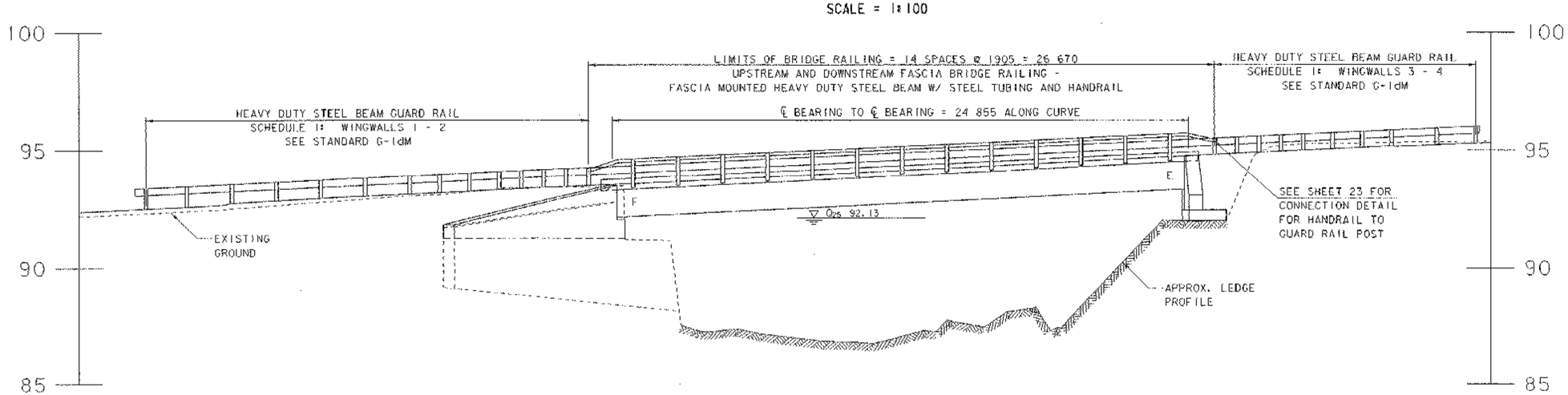

ELEVATION

0 1 2 4 6 8 10

SCALE = 1:100

SHEET NAME: PLAN AND ELEVATION SHEET	
PROJECT NAME: FAIR HAVEN-HAMPTON	HIGHWAY NO.: TH 6
	BRIDGE NO.: 6
PROJECT NUMBER: BRO 1443(32)	OVER: POULTNEY RIVER
FILE NAME: /strl/93102l/s102lpe.dgn	PLOT DATE: 28-JAN-2003
PROJECT MANAGER: G.S. ROGERS	DRAWN BY: STR
DESIGNED BY: C. MELINIER	IFARM NAME: s102lpe.f
BRIDGE SHEET NUMBER:	SHEET 16 OF 53

NOTES:

1. USE THIS SHEET IN CONJUNCTION WITH STANDARDS T1M AND T2M.
2. AN ALTERNATE EROSION CONTROL PLAN MAY BE SUBMITTED BY THE CONTRACTOR. SUBJECT TO THE APPROVAL OF THE RESIDENT ENGINEER.
3. THE CONTRACTOR WILL USE OTHER TEMPORARY OR PERMANENT EROSION CONTROL MEASURES AS REQUIRED BY THE CONSTRUCTION SEQUENCE AND THE RESIDENT ENGINEER. (SEE SECTION 105.23 OF THE VERMONT STANDARD SPECIFICATIONS FOR CONSTRUCTION. DATED 2001).
4. THE CONTRACTOR SHALL SUBMIT A PLAN FOR MAINTAINING STREAM FLOW DURING PLACEMENT OF THE PRECAST BOX UNITS PRIOR TO THE START OF THIS WORK.

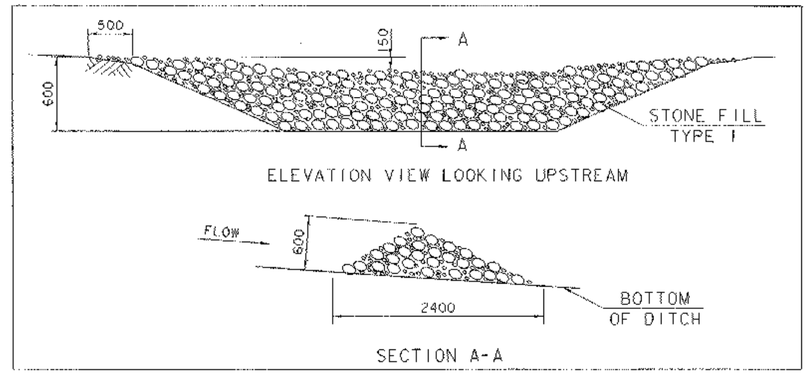

ROCK CHECK DAM
NOT TO SCALE

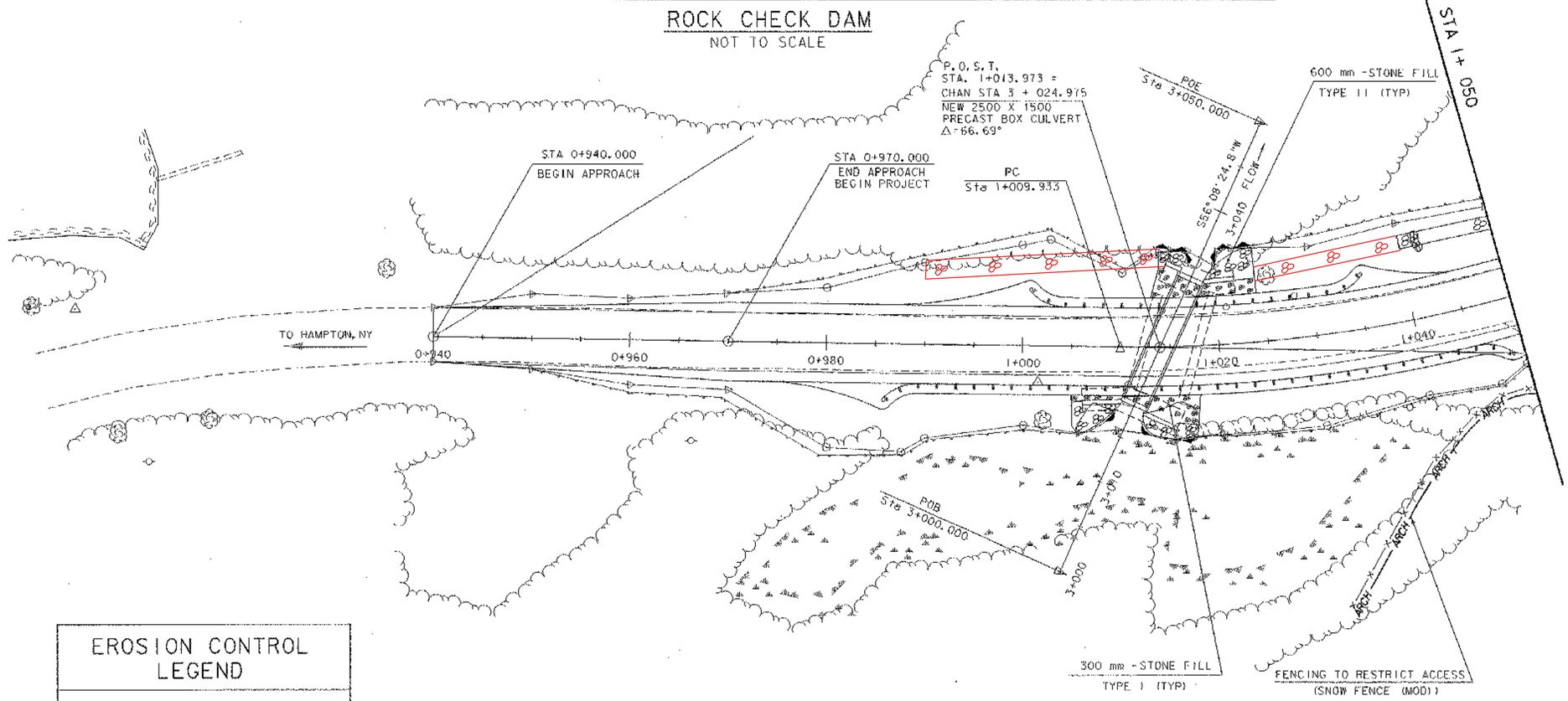

TOWN OF HAMPTON, N.Y.

EROSION CONTROL LEGEND

- FILTER CURTAIN
- SILT FENCE
- ROCK CHECK DAM
- STONE FILL, TYPE I
- STONE FILL, TYPE II

0 10 20
SCALE 1:250

SHEET NAME: EROSION CONTROL SHEET 1	
PROJECT NAME: FAIR HAVEN-HAMPTON	HIGHWAY NO.: TH 6
PROJECT NUMBER: BRO 1443(32)	BRIDGE NO.: 6
	OVER: POULTNEY RIVER
FILE NAME: /strl/93j021/sj021bdr.dgn	PLOT DATE: 28-JAN-2003
PROJECT MANAGER: G.S. ROGERS	DRAWN BY: STRI
DESIGNED BY: C. MEUNIER	IPARM NAME: sj021ecl.1
BRIDGE SHEET NUMBER:	SHEET 17 OF 53

Metric

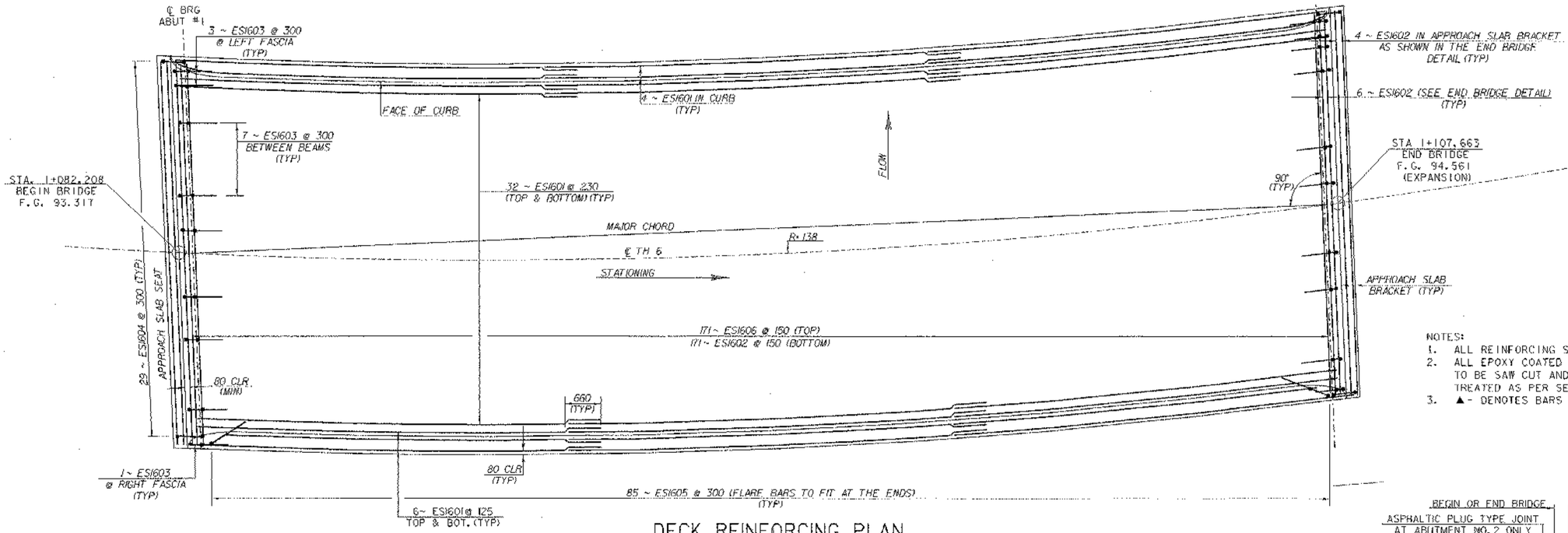

NOTES:
1. ALL REINFORCING STEEL SHALL BE EPOXY COATED.
2. ALL EPOXY COATED STEEL TO BE CUT IN FIELD IS TO BE SAW CUT AND THE EXPOSED END IS TO BE TREATED AS PER SECTION 507.04
3. ▲- DENOTES BARS TO BE CUT IN THE FIELD

DECK REINFORCING PLAN

SCALE: 1:50

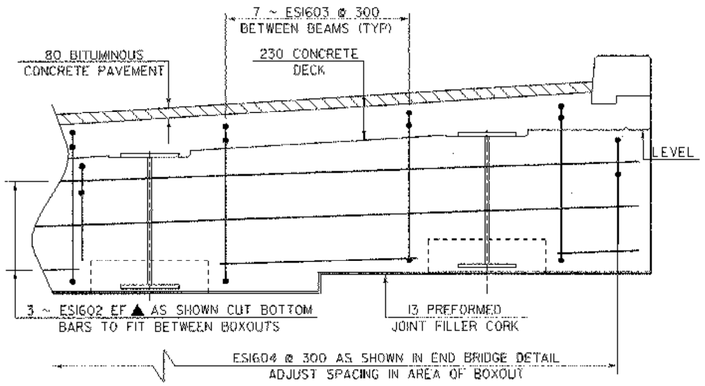

CURTAIN WALL ELEVATION

SCALE: NTS

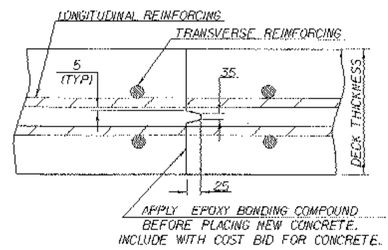

TRANSVERSE BRIDGE SLAB CONSTRUCTION JOINT DETAILS

P.V.C. WATERSTOP FOR CONSTRUCTION JOINTS

THE COSTS FOR P.V.C.WATERSTOP SHALL BE INCLUDED IN THE UNIT PRICE BID FOR CONCRETE. OTHER CONFIGURATIONS MAY BE USED UPON APPROVAL OF THE STRUCTURES ENGINEER.

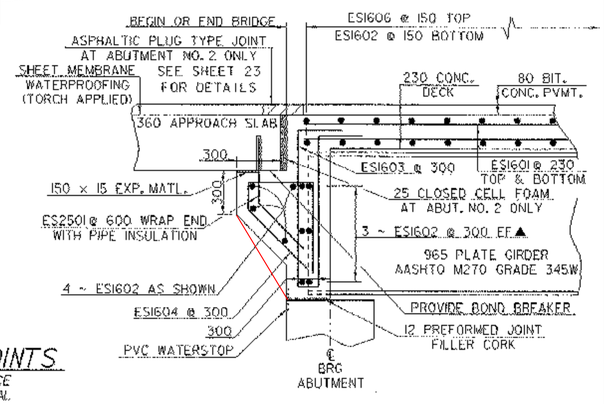

BEGIN & END BRIDGE DETAIL (NORMAL TO ℄ BRIDGE)

SCALE: 1:20

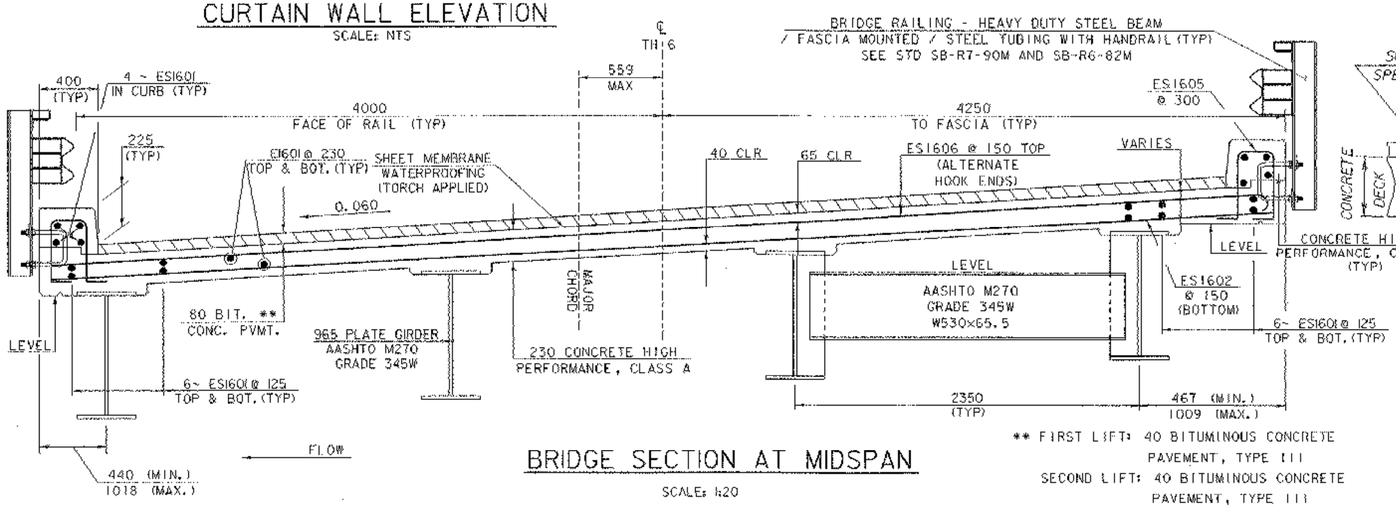

BRIDGE SECTION AT MIDSPAN

SCALE: 1:20

** FIRST LIFT: 40 BITUMINOUS CONCRETE PAVEMENT, TYPE III
SECOND LIFT: 40 BITUMINOUS CONCRETE PAVEMENT, TYPE III

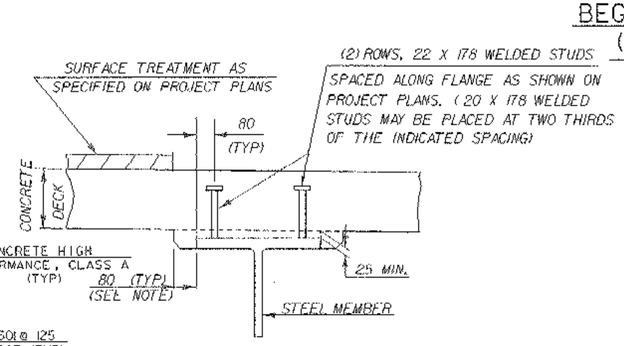

HAUNCH AND SHEAR CONNECTOR DETAILS

NOTE: THE 80 HORIZONTAL SECTION MAY BE ELIMINATED FOR FORMING SYSTEMS DESIGNED FOR THE CONSTRUCTION OF VERTICAL HAUNCHES IF APPROVED BY THE STRUCTURES ENGINEER

SCALE: NO

SHEET NAME: DECK REINFORCING PLAN	
PROJECT NAME: FAIR HAVEN-HAMPTON	HIGHWAY NO.: TH 6
PROJECT NUMBER: BRO 1443(32)	BRIDGE NO.: 6
	OVER: POULTNEY RIVER
FILE NAME: /str1/93j021/sj021sup2.dgn	PLOT DATE: 28-JAN-2003
PROJECT MANAGER: G.S. ROGERS	DRAWN BY: J. GILMORE
DESIGNED BY: C. MEUNIER	IPARM NAME: sj021drp.i
BRIDGE SHEET NUMBER:	SHEET 20 OF 53

Metric

ABUTMENT #1 FOOTING REINFORCING STEEL

EACH	SIZE	LENGTH	MARK	TYPE	A	B	C	D
30	16	1340	1A1607	STR				
12	16	8760	1A1608	STR				
30	16	1800	1A1609	17		740	1060	--
30	16	2100	1A1610	17		1040	1060	--

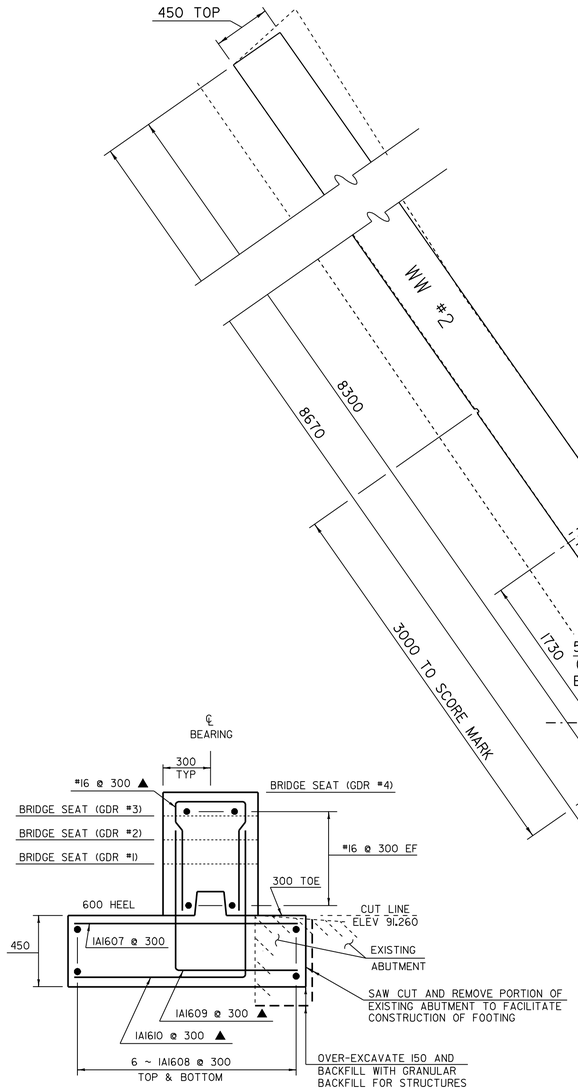

ABUTMENT #1

SCALE 1:200

STATIONING →

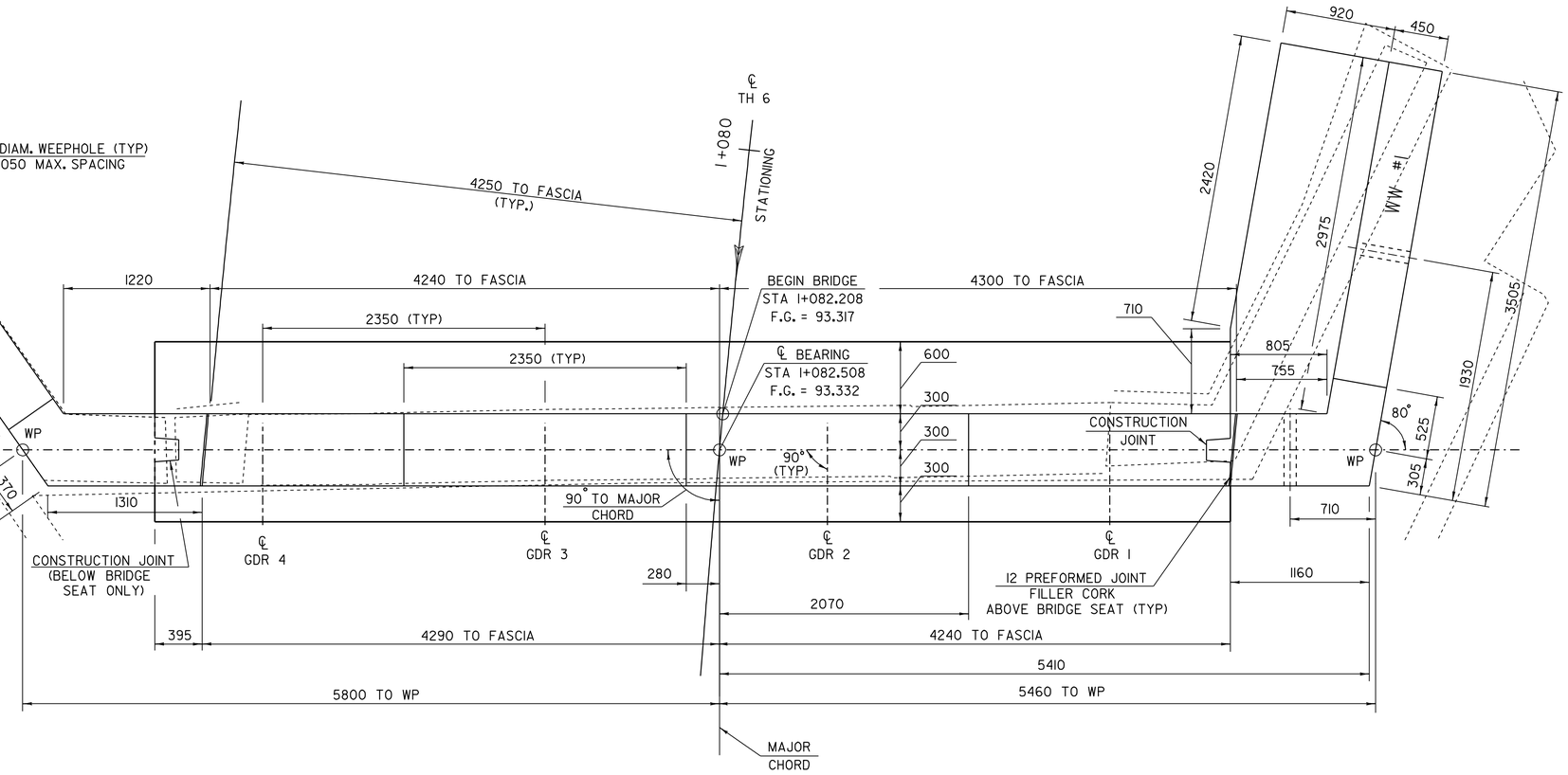

ABUTMENT NO. 1 PLAN

SCALE 1:25

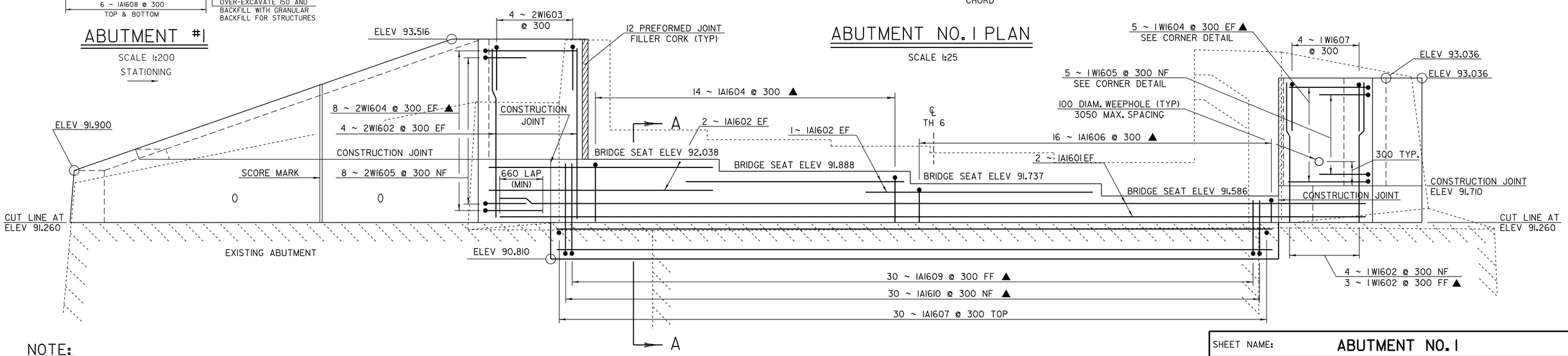

ABUTMENT NO.1 ELEVATION

SCALE 1:25

NOTE:

1. NF = NEAR FACE
2. FF = FAR FACE
3. EF = EACH FACE
4. ▲ = CUT TO FIT IN FIELD
5. 80 CLEAR UNLESS OTHERWISE SPECIFIED ON THE PLANS
6. ** DRILL & GROUT DOWELS AS SHOWN. 450 MINIMUM DEPTH OF GROUTING
7. 3000 MAX. WEEPHOLE SPACING
8. REMOVAL OF CONCRETE ABOVE CUTLINE PAID AS "REMOVAL OF CONCRETE OR MASONRY"
9. ALL LAPS 660 UNLESS NOTED

REV: 5/06/03

SHEET NAME:	ABUTMENT NO. 1		
PROJECT NAME:	FAIR HAVEN-HAMPTON	HIGHWAY NO.:	TH 6
PROJECT NUMBER:	BRO 1443(32)	BRIDGE NO.:	6
		OVER:	POULTNEY RIVER
FILE NAME:	/strl/93J021/sj021sub2.dgn	PLOT DATE:	29-MAR-2005
PROJECT MANAGER:	G.S. ROGERS	DRAWN BY:	D.BONNEAU
DESIGNED BY:	C.MEUNIER	IPARM NAME:	sj021abl.i
BRIDGE SHEET NUMBER:		SHEET	25 OF 53

Metric

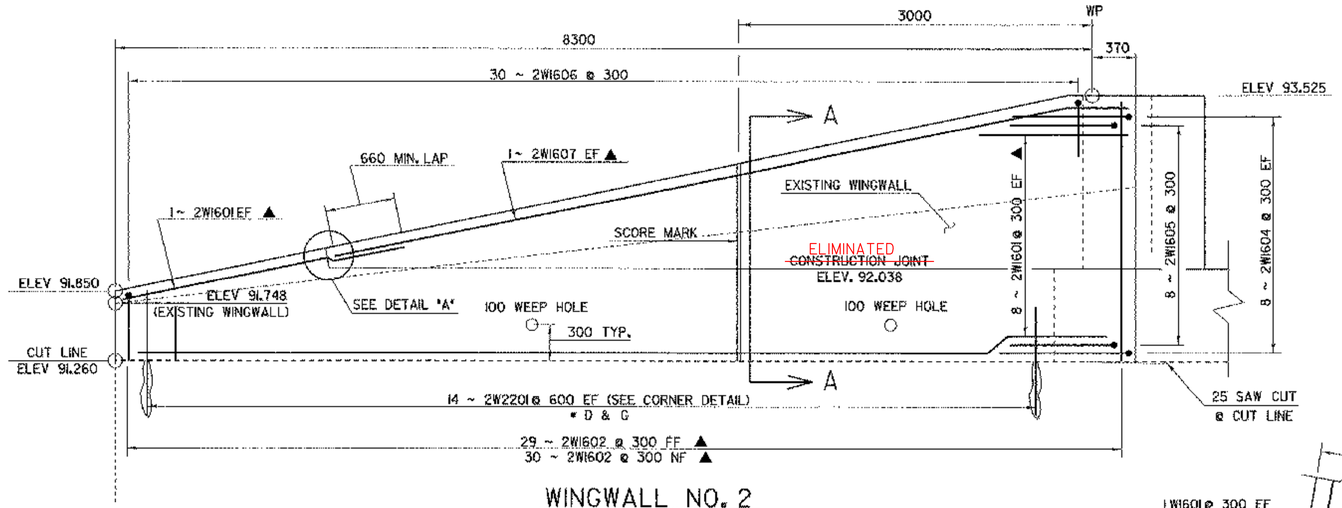

WINGWALL NO. 2

SCALE 1:25

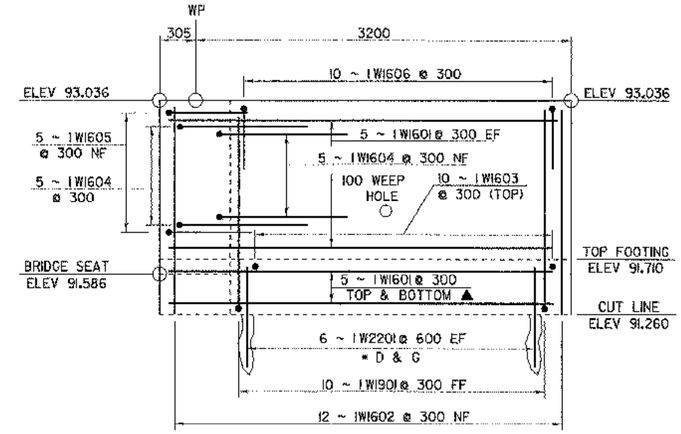

WINGWALL NO. 1

SCALE 1:25

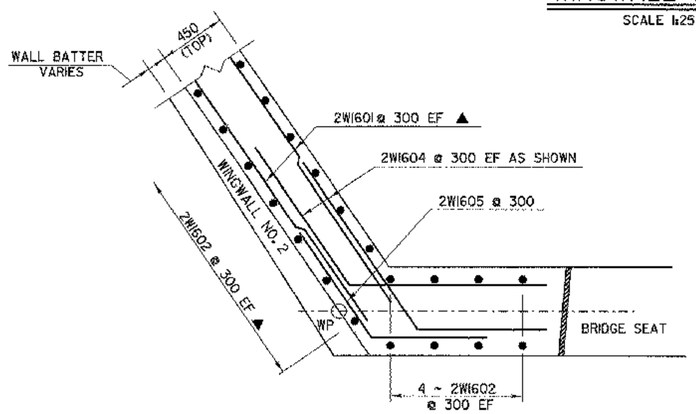

CORNER DETAIL WINGWALL NO.2 (ABOVE BRIDGE SEAT)

SCALE 1:20

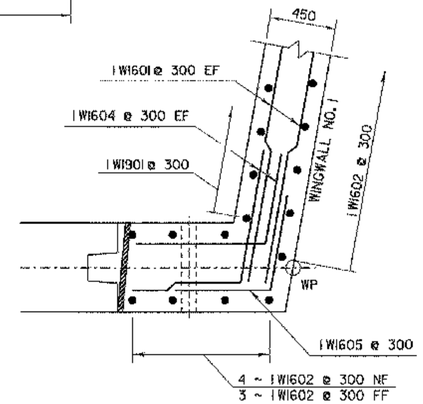

CORNER DETAIL WINGWALL NO.1

SCALE 1:20

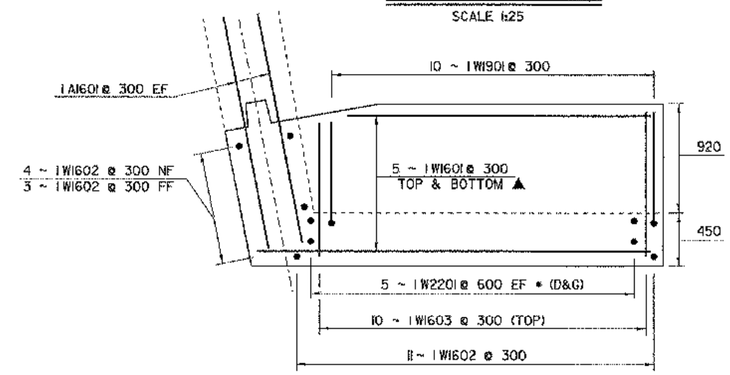

WINGWALL NO.1 FOOTING

SCALE 1:25

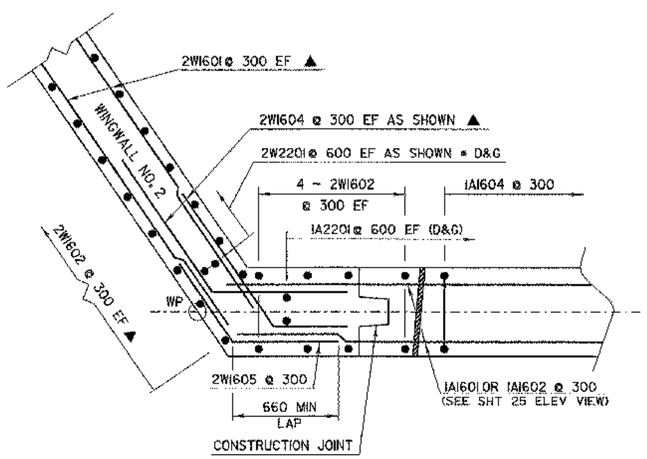

CORNER DETAIL WINGWALL NO.2 (BELOW BRIDGE SEAT)

SCALE 1:20

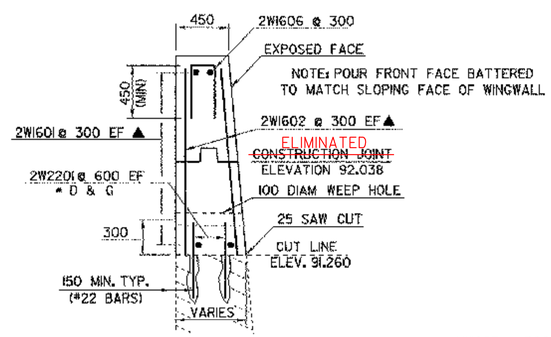

WINGWALL NO. 2 SECTION A-A

SCALE 1:25

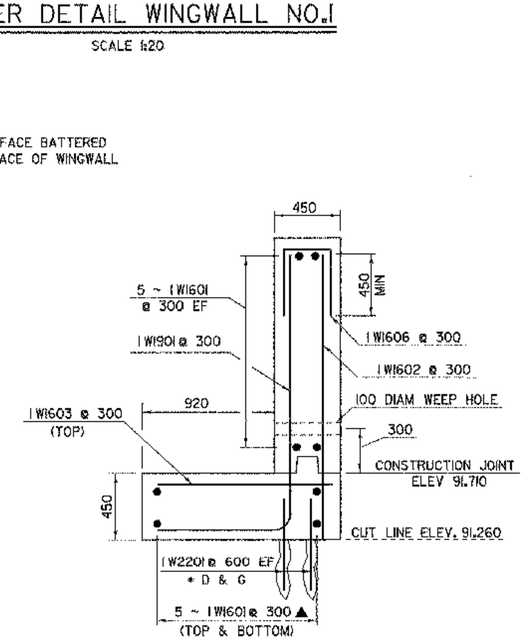

WINGWALL NO. 1 TYPICAL SECTION

SCALE 1:20

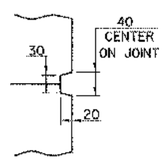

SCORE MARK DETAIL

(NTS)

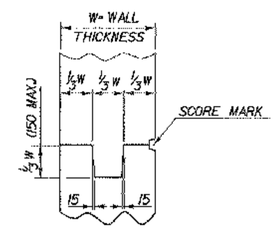

TYPICAL CONCRETE CONSTRUCTION JOINT

(NTS)

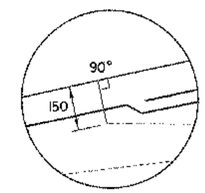

DETAIL "A"

(NTS)

NOTES:

NF = NEAR FACE
FF = FAR FACE
EF = EACH FACE
▲ = CUT TO FIT IN FIELD
60 CLEAR UNLESS OTHERWISE SPECIFIED ON THE PLANS
* DRILL & GROUT DOWELS AS SHOWN. 450 MINIMUM DEPTH OF GROUTING

SHEET NAME: WINGWALLS 1 & 2 DETAILS	
PROJECT NAME: FAIR HAVEN-HAMPTON	HIGHWAY NO.: TH 6
PROJECT NUMBER: BRO 1443(32)	BRIDGE NO.: 6
	OVER: POULTNEY RIVER
FILE NAME: /str1/93J021/sj021sub2.dgn	PLOT DATE: 23-MAR-2005
PROJECT MANAGER: G.S. ROGERS	DRAWN BY: D. BONNEAU
DESIGNED BY: C. MEUNIER	IPARM NAME: sj021crd.i
BRIDGE SHEET NUMBER:	SHEET 26 OF 53

Metric

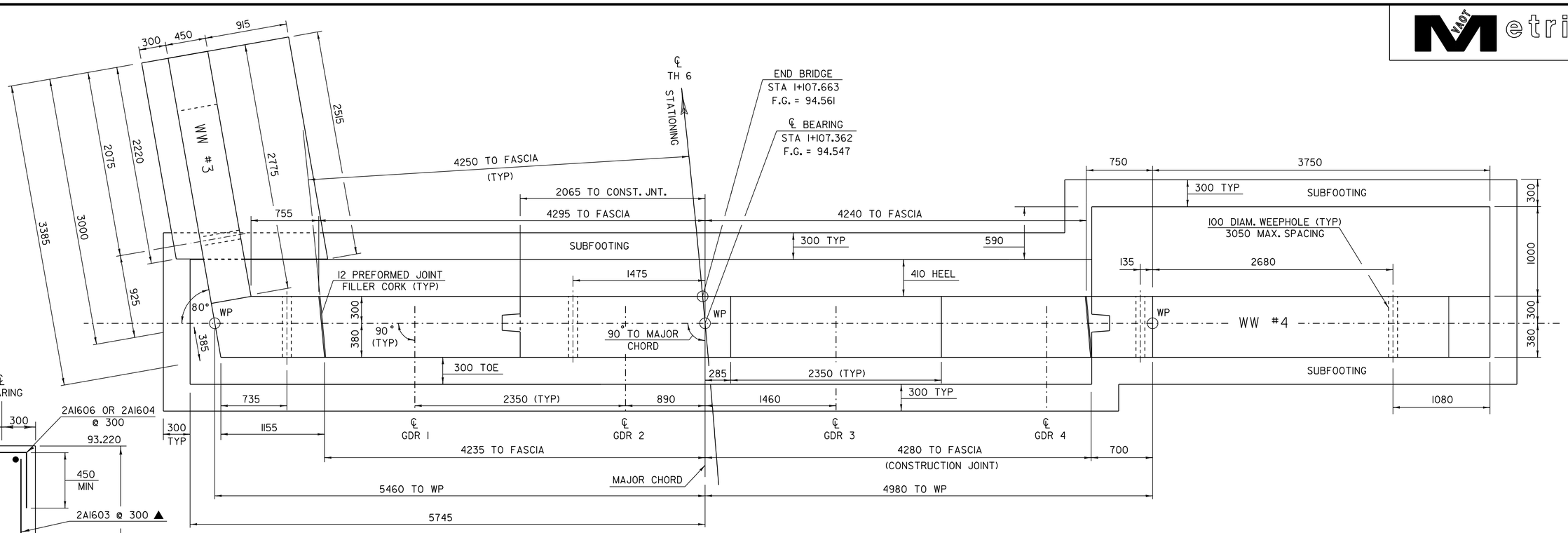

ABUTMENT NO. 2 PLAN

SCALE 1:25

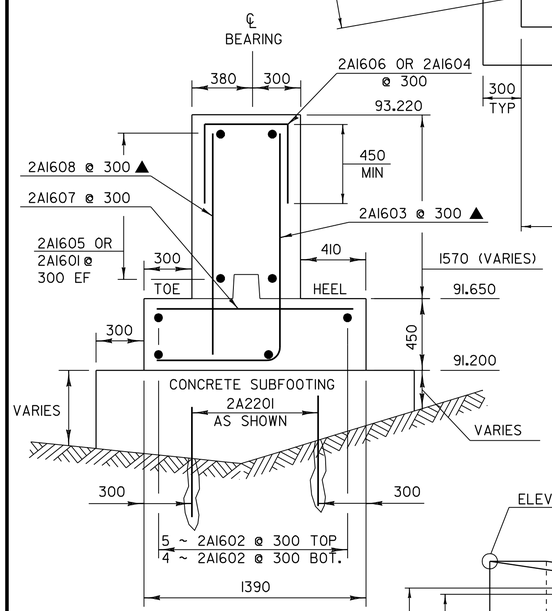

SECTION C-C

SCALE 1:20

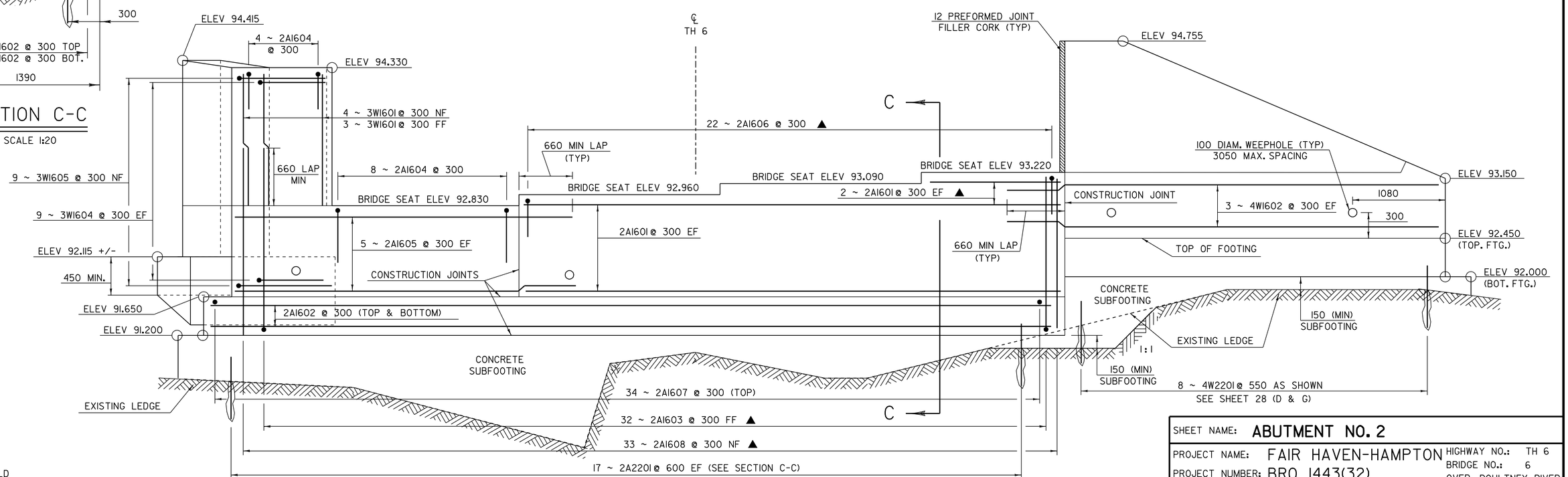

ABUTMENT NO. 2 ELEVATION

SCALE 1:25

NOTE:

NF = NEAR FACE
FF = FAR FACE
EF = EACH FACE
▲ = CUT TO FIT IN FIELD
80 CLEAR UNLESS OTHERWISE SPECIFIED ON THE PLANS
** DRILL & GROUT DOWELS AS SHOWN. 450 MINIMUM DEPTH OF GROUTING

REV: 5/14/03

SHEET NAME: ABUTMENT NO. 2	
PROJECT NAME: FAIR HAVEN-HAMPTON	HIGHWAY NO.: TH 6
PROJECT NUMBER: BRO 1443(32)	BRIDGE NO.: 6
	OVER: POULTNEY RIVER
FILE NAME: /str1/93j021/sj021sub2.dgn	PLOT DATE: 29-MAR-2005
PROJECT MANAGER: G.S. ROGERS	DRAWN BY: D.BONNEAU
DESIGNED BY: C.MEUNIER	IPARM NAME: sj021ab2.i
BRIDGE SHEET NUMBER:	SHEET 27 OF 53

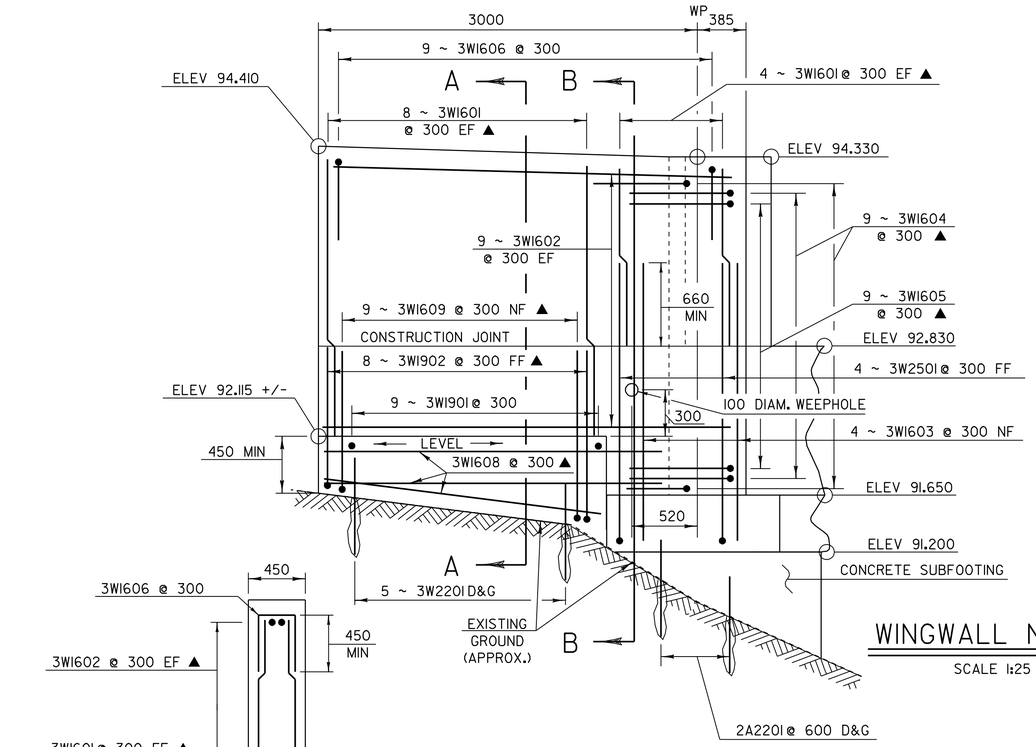

WINGWALL NO.3

SCALE 1:25

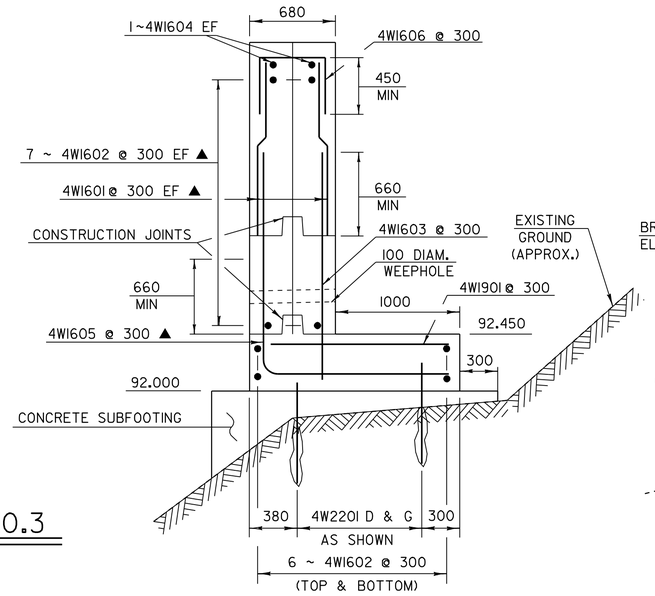

WINGWALL NO. 4 TYPICAL SECTION

SCALE 1:25

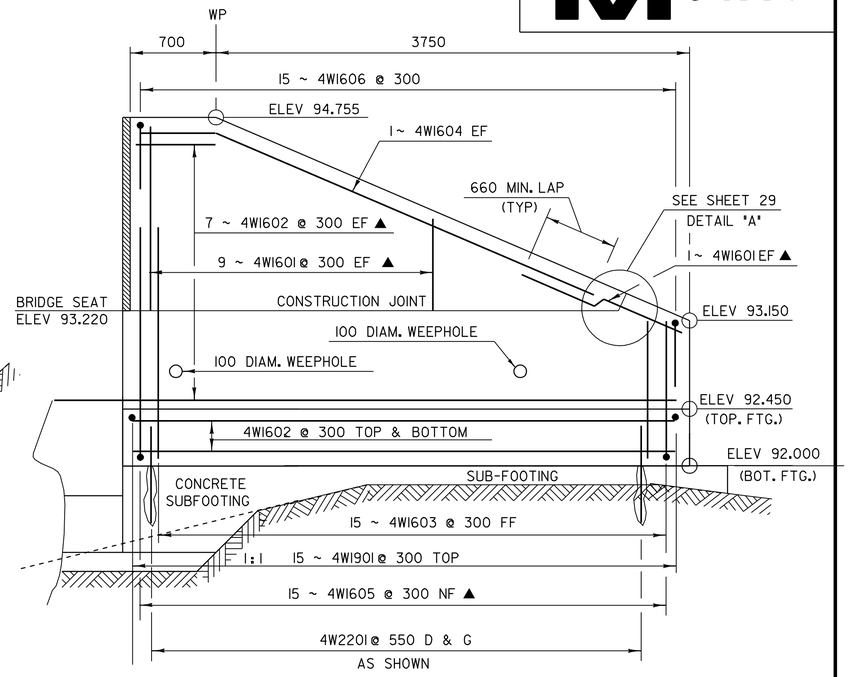

WINGWALL NO. 4

SCALE 1:25

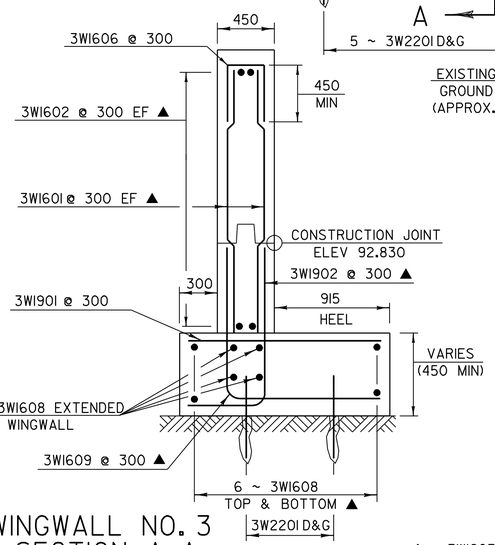

WINGWALL NO. 3 SECTION A-A

SCALE 1:25

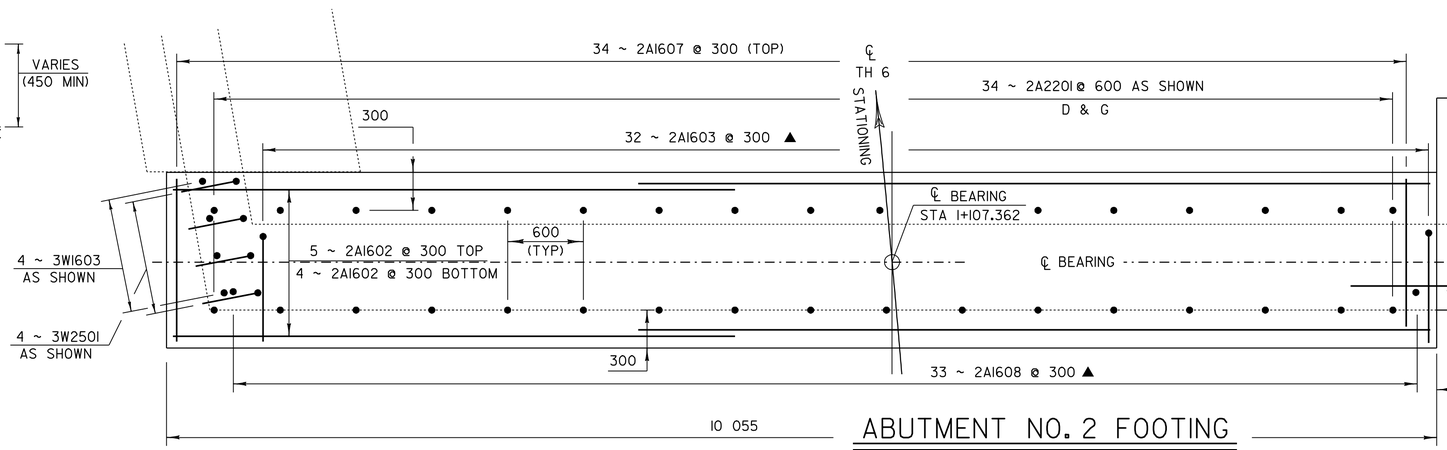

ABUTMENT NO. 2 FOOTING

SCALE 1:25

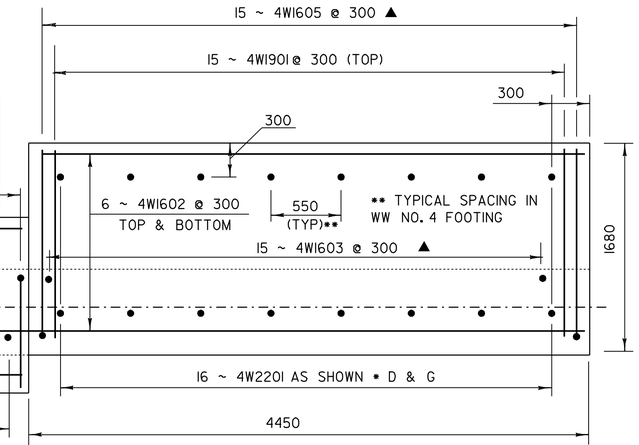

WINGWALL NO. 4 FOOTING

SCALE 1:25

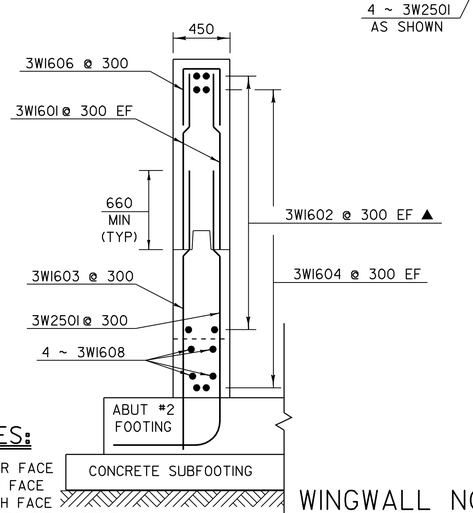

WINGWALL NO. 3 SECTION B-B

SCALE 1:25

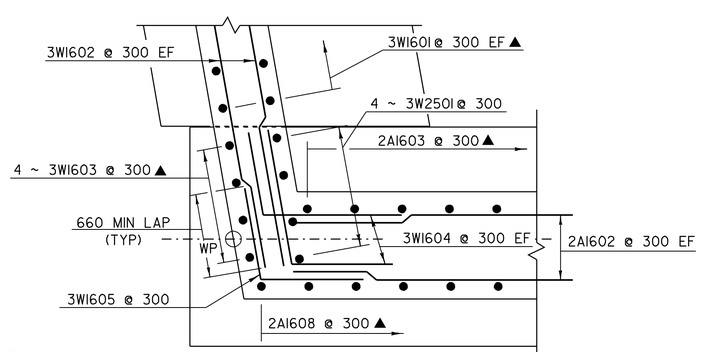

WINGWALL NO.3 CORNER DETAIL BELOW BRIDGE SEAT

SCALE 1:20

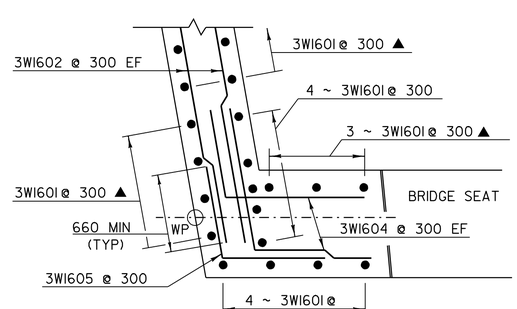

WINGWALL NO.3 CORNER DETAIL ABOVE BRIDGE SEAT

SCALE 1:20

REV: 5/14/03

NOTES:

NF = NEAR FACE
FF = FAR FACE
EF = EACH FACE
▲ = CUT TO FIT IN FIELD
80 CLEAR UNLESS OTHERWISE SPECIFIED ON THE PLANS
* DRILL & GROUT DOWELS AS SHOWN. 450 MINIMUM DEPTH OF GROUTING

SHEET NAME: WINGWALL 3 & 4 DETAILS	
PROJECT NAME: FAIR HAVEN-HAMPTON	HIGHWAY NO.: TH 6
	BRIDGE NO.: 6
PROJECT NUMBER: BRO 1443(32)	OVER: POULTNEY RIVER
FILE NAME: /strl/93J021/sJ021sub2.dgn	PLOT DATE: 29-MAR-2005
PROJECT MANAGER: G.S. ROGERS	DRAWN BY: D. BONNEAU
DESIGNED BY: C. MEUNIER	IPARM NAME: sJ021crdl.i
BRIDGE SHEET NUMBER:	SHEET 28 OF 53

Metric

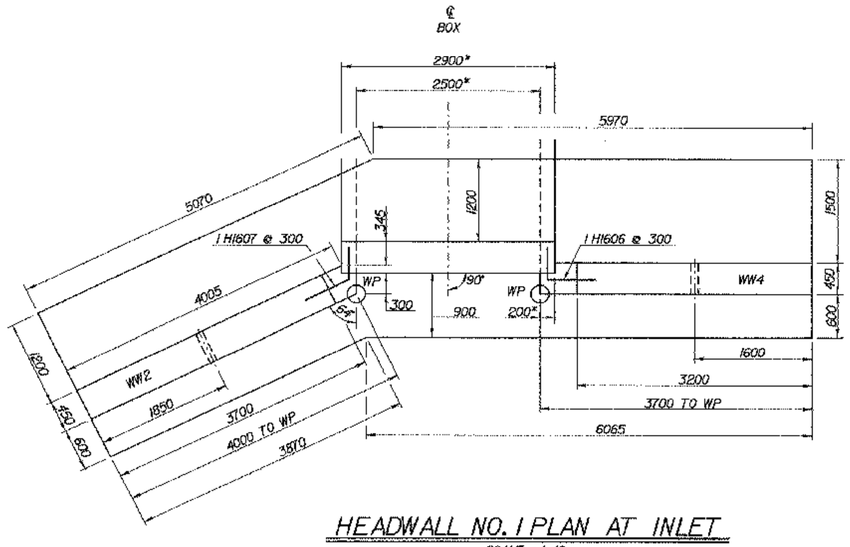

HEADWALL NO. 1 PLAN AT INLET

SCALE - 1:40

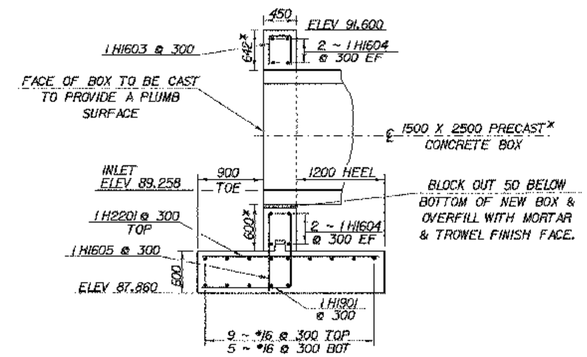

INLET HEADWALL SECTION A-A

SCALE - 1:40

* DIMENSIONS SHOWN ARE FOR AN ASSUMED RC BOX WALL THICKNESS OF 200 mm. ACTUAL DIMENSIONS MAY VARY.

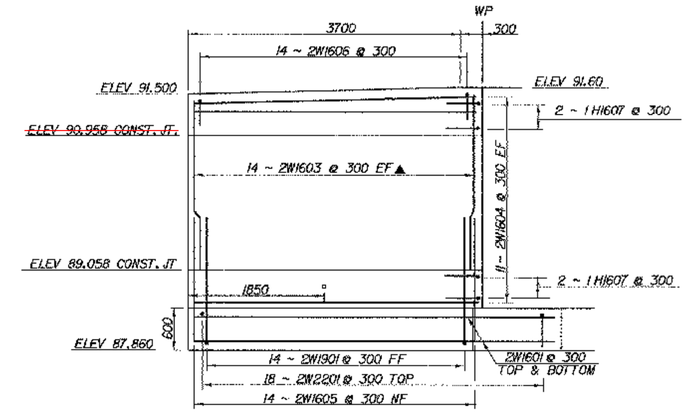

WINGWALL NO. 2 ELEVATION

SCALE - 1:40

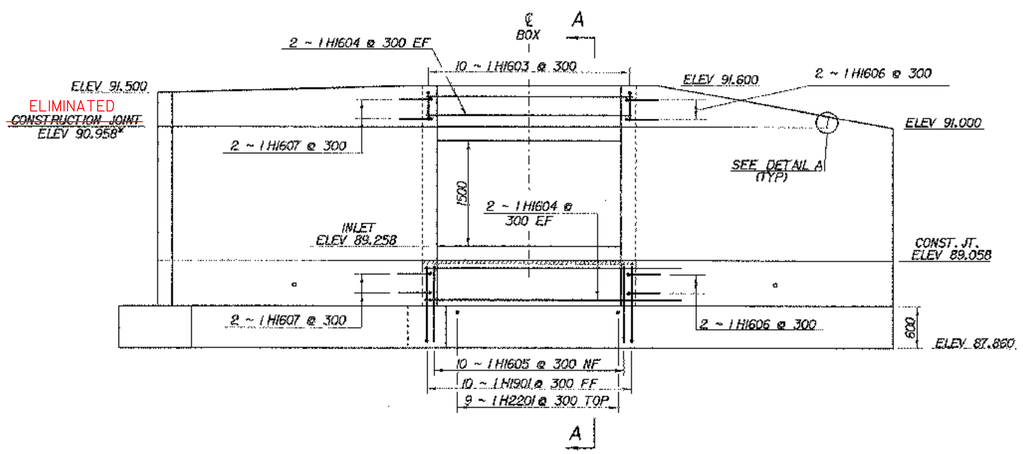

HEADWALL NO. 1 ELEVATION

SCALE - 1:40

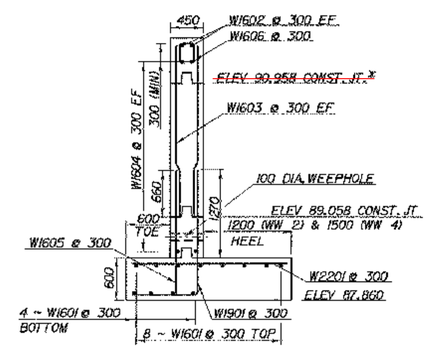

WINGWALL SECTION TYPICAL

SCALE - 1:40

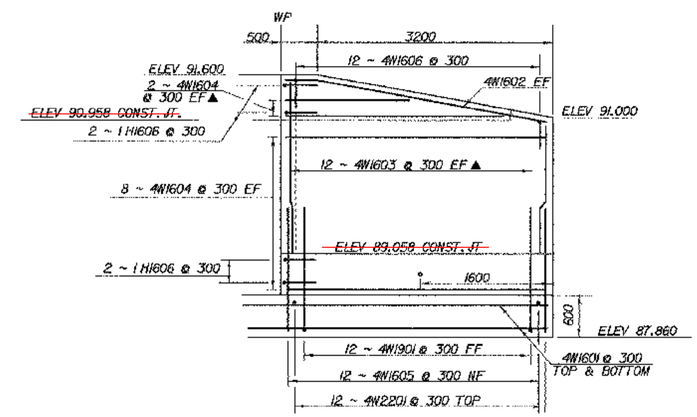

WINGWALL NO. 4 ELEVATION

SCALE - 1:40

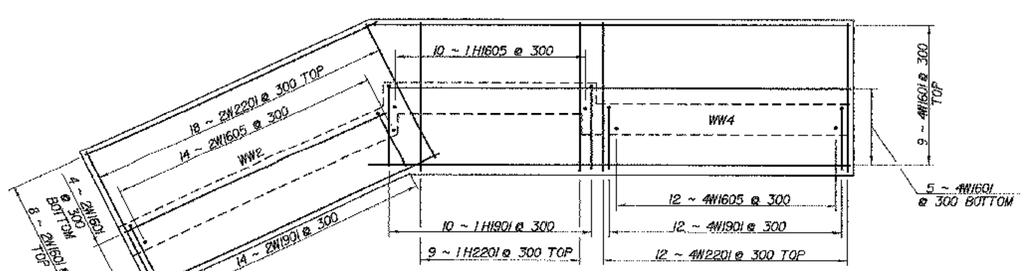

HEADWALL NO. 1 FOOTING REINFORCING

SCALE - 1:40

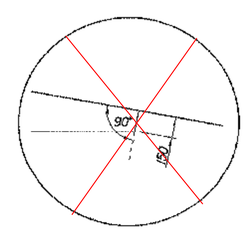

CONSTRUCTION JOINT ELIMINATED IN WINGS

DETAIL A (TYP)

SCALE - 1:20

NOTE:

NF - NEAR FACE
FF - FAR FACE
EF - EACH FACE
▲ - CUT TO FIT IN FIELD
80 CLR. UNLESS OTHERWISE SPECIFIED ON THE PLANS.
3000 MAX WEEPHOLE SPACING

REVISED 14-MAR-03

SHEET NAME: HEADWALL NUMBER 1	
PROJECT NAME: FAIR HAVEN-HAMPTON	HIGHWAY NO.: TH 6
PROJECT NUMBER: BRO 1443(32)	BRIDGE NO.: 6 OVER: POULTNEY RIVER
FILE NAME: /str1/93j021/sj021box.dgn	PLOT DATE: 23-MAR-2005
PROJECT MANAGER: G.S. ROGERS	DRAWN BY: J.GILMORE
DESIGNED BY: C. MEUNIER	IPARM NAME: sj021bx8.1
BRIDGE SHEET NUMBER:	SHEET 32 OF 53

Metric

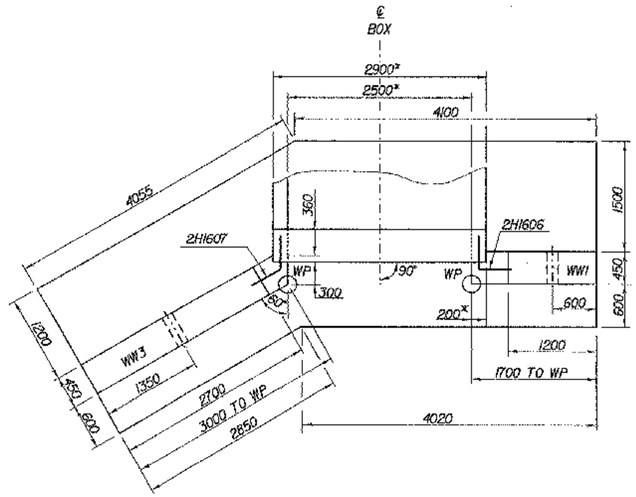

HEADWALL NO. 2 PLAN AT OUTLET

SCALE = 1:40

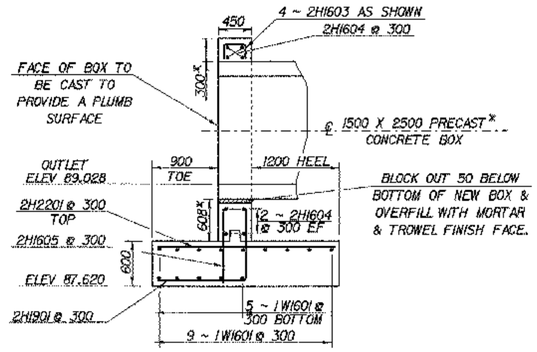

OUTLET HEADWALL SECTION B-B

SCALE = 1:40

* DIMENSIONS SHOWN ARE FOR AN ASSUMED RC BOX WALL THICKNESS OF 200 mm. ACTUAL DIMENSIONS MAY VARY.

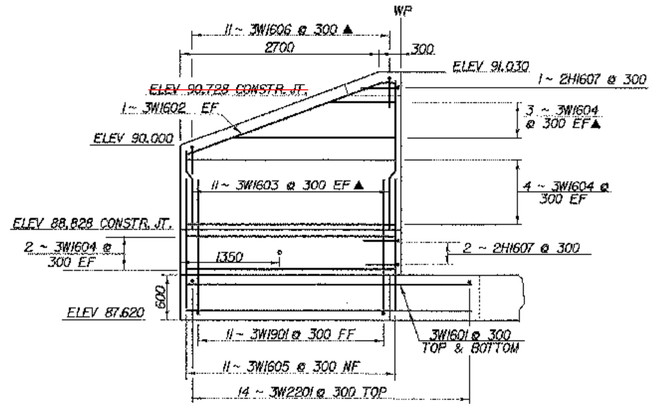

WINGWALL NO. 3 ELEVATION

SCALE = 1:40

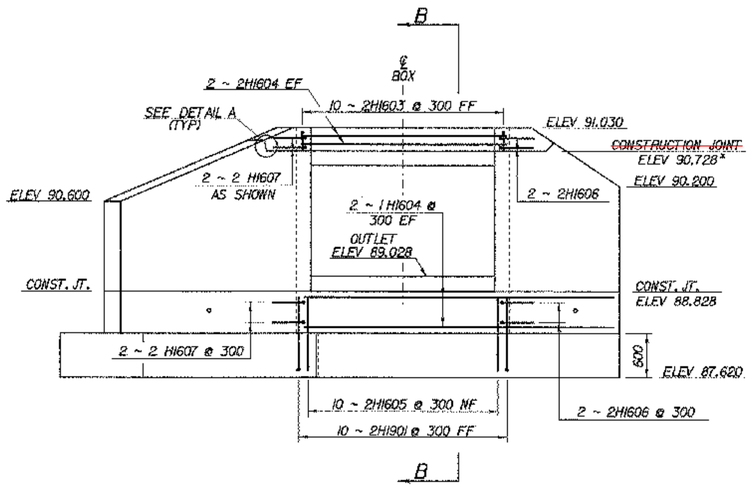

HEADWALL NO. 2 ELEVATION

SCALE = 1:40

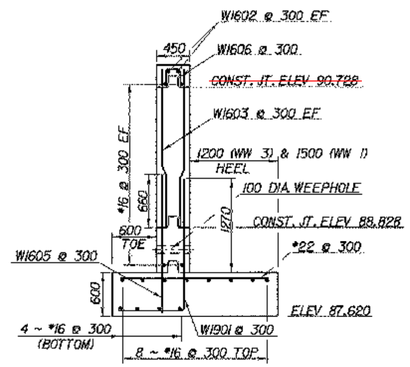

WINGWALL SECTION TYPICAL

SCALE = 1:40

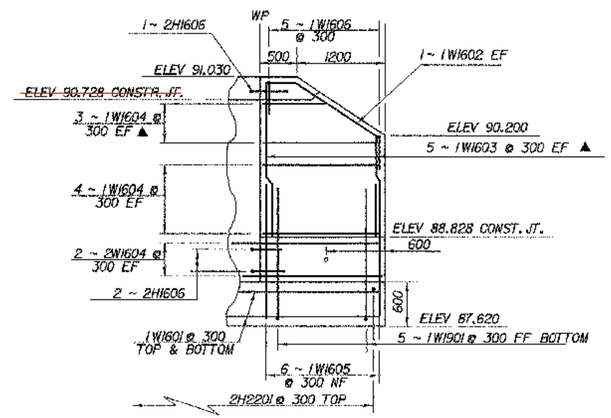

WINGWALL NO. 1 ELEVATION

SCALE = 1:40

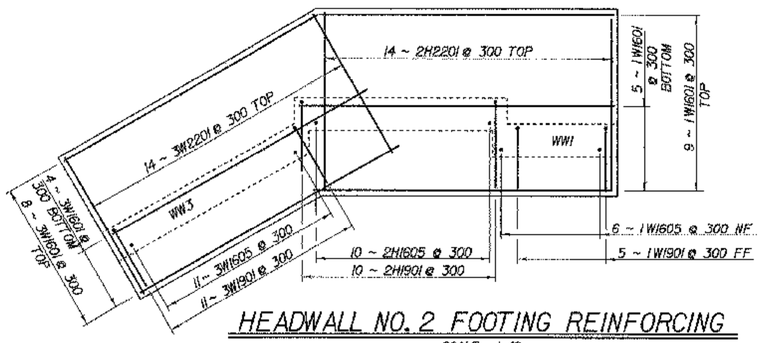

HEADWALL NO. 2 FOOTING REINFORCING

SCALE = 1:40

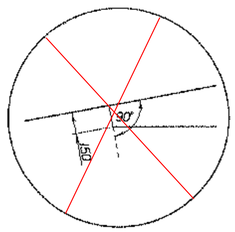

DETAIL A (TYP)

SCALE = 1:20

NOTE:

NF = NEAR FACE
FF = FAR FACE
EF = EACH FACE
▲ = CUT TO FIT IN FIELD
80 CLR. UNLESS OTHERWISE SPECIFIED ON THE PLANS.
3000 MAX WEEPHOLE SPACING

REVISED 14-MAR-03

SHEET NAME: HEADWALL NUMBER 2	
PROJECT NAME: FAIR HAVEN-HAMPTON	HIGHWAY NO.: TH 6
PROJECT NUMBER: BRO 1443(32)	BRIDGE NO.: 6
	OVER: POULTNEY RIVER
FILE NAME: /str1/93j021/sj021box.dgn	PLOT DATE: 23-MAR-2005
PROJECT MANAGER: G.S. ROGERS	DRAWN BY: J.GILMORE
DESIGNED BY: C. MEUNIER	IPARM NAME: sj021bx9.1
BRIDGE SHEET NUMBER:	SHEET 33 OF 53

*NO COLD PLANING DONE ON EAST APPROACH

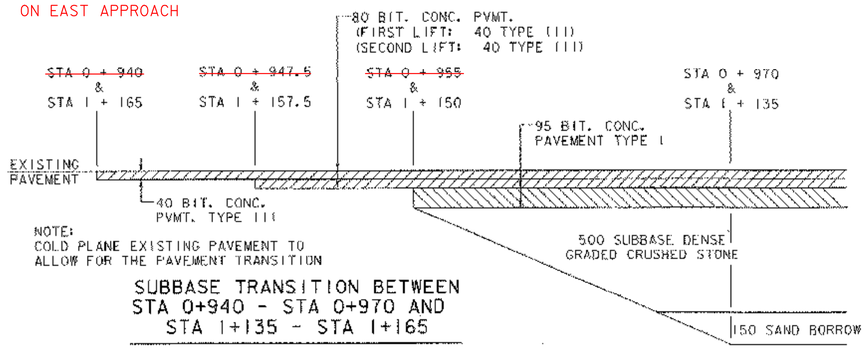

SUBBASE TRANSITION BETWEEN
STA 0+940 - STA 0+970 AND
STA 1+135 - STA 1+165

NTS

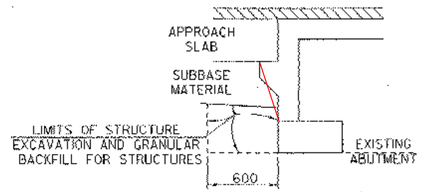

ABUTMENT NO. 1

NTS

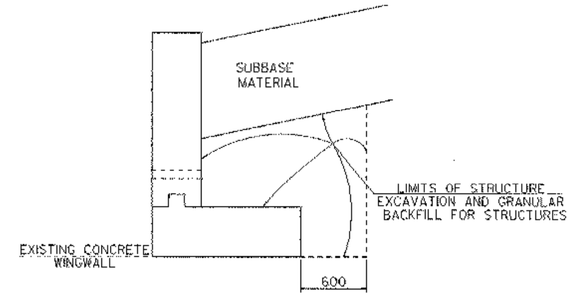

WINGWALL NO. 1

NTS

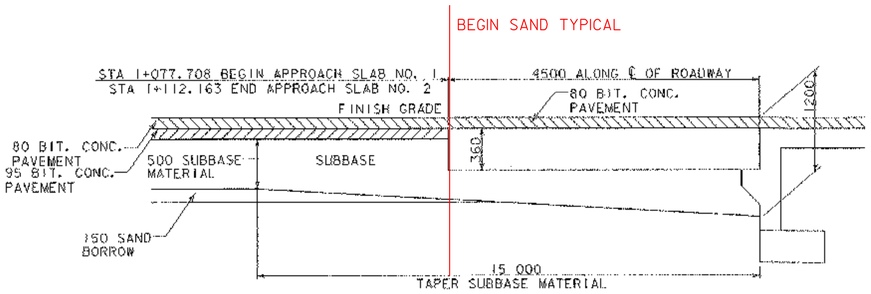

APPROACH SLAB DETAIL

NTS

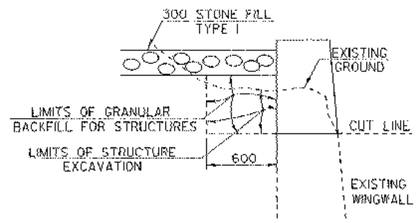

WINGWALL NO. 2

NTS

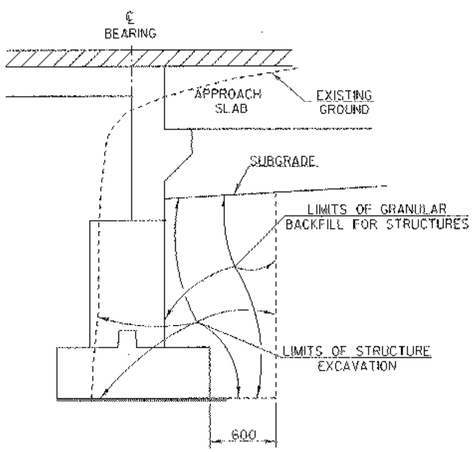

ABUTMENT NO. 2

NTS

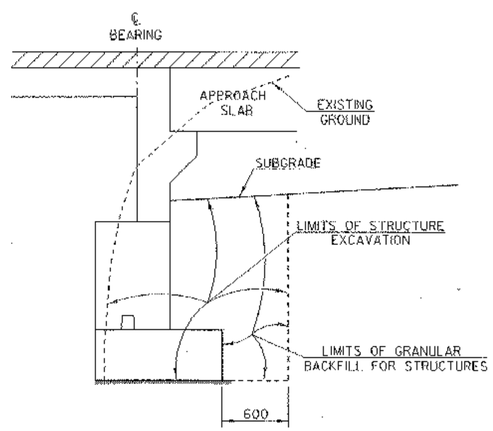

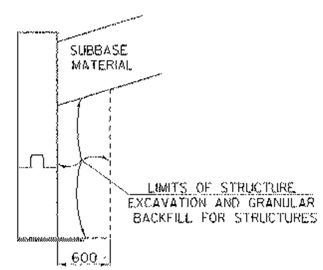

WINGWALL NO. 3

NTS

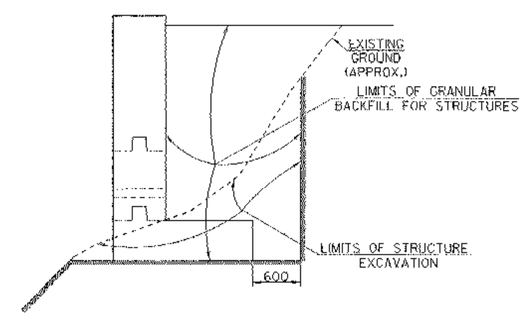

WINGWALL NO. 4

NTS

SHEET NAME: SUBBASE TRANSITION AND EXCAVATION DETAILS	
PROJECT NAME: FAIR HAVEN-HAMPTON	HIGHWAY NO.: TH 6
PROJECT NUMBER: BRO 1443(32)	BRIDGE NO.: 6
	OVER: POULTNEY RIVER
FILE NAME: /stri/93j021/sj021x6.dgn	PLOT DATE: 28-JAN-2003
PROJECT MANAGER: G.S. ROGERS	DRAWN BY: STRI
DESIGNED BY: C. MEUNIER	PARM NAME: sj021mx8.i
BRIDGE SHEET NUMBER:	SHEET 36 OF 53

Metric

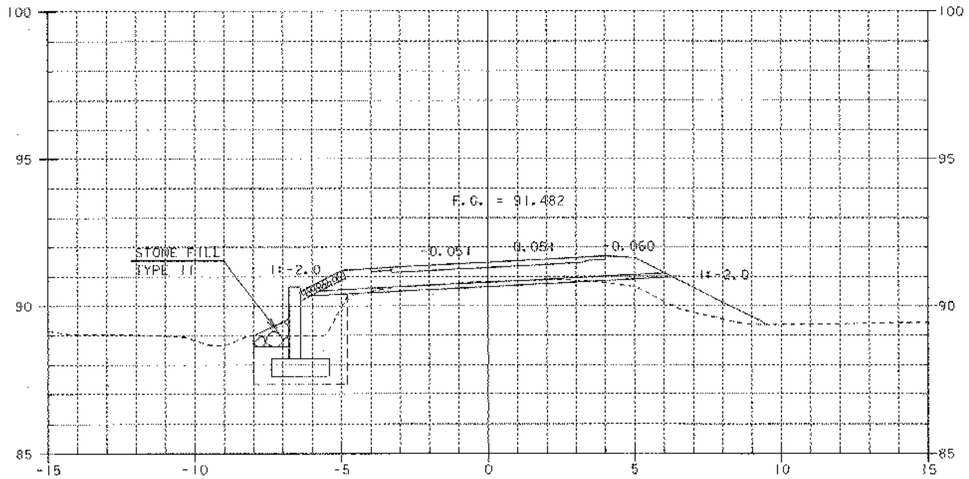

1+020

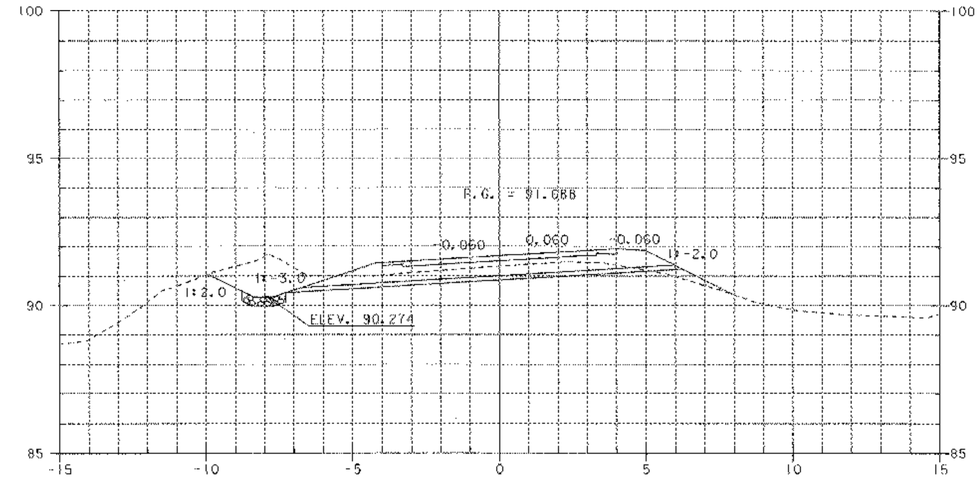

STA. 1+040.000 LT
BEGIN STONE FILL, TYPE I, DITCH

1+040

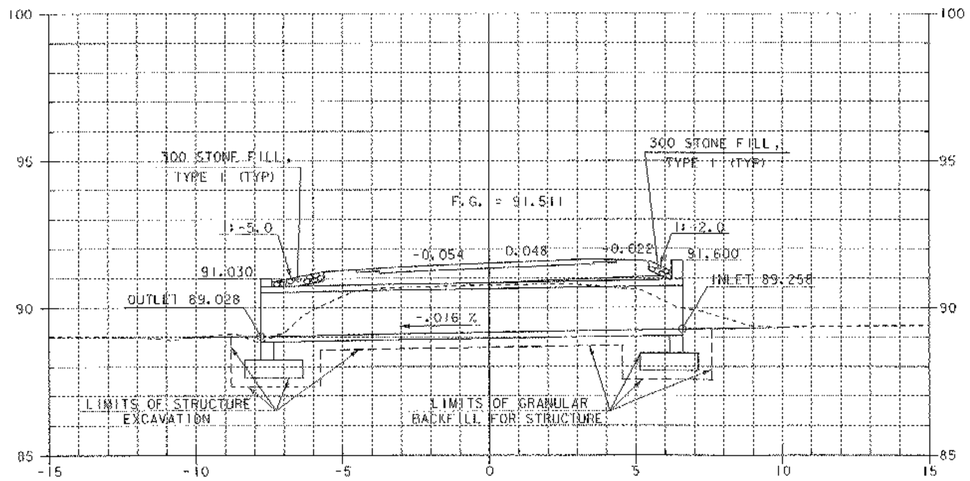

1+014
C/L BOX CULVERT
SKEWED 66.7° OFF SUB TANGENT

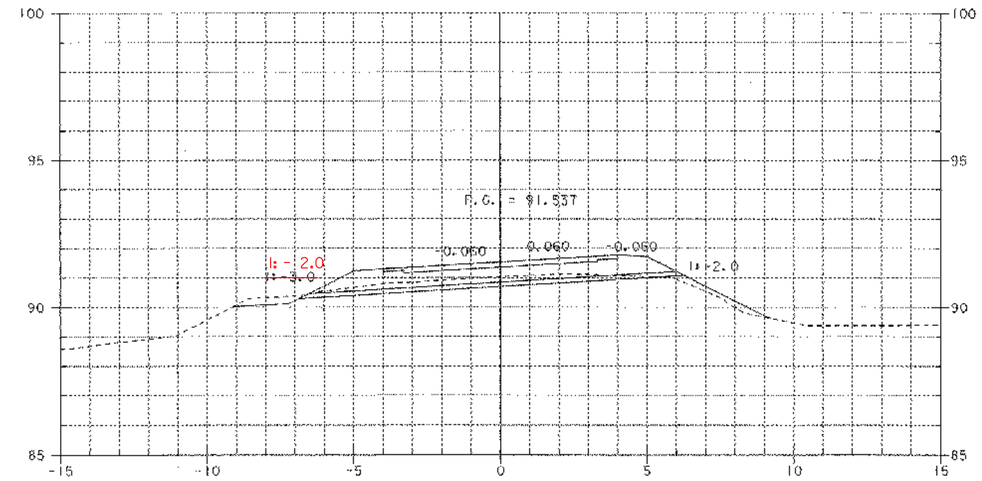

1+030

SHEET NAME: MAINLINE CROSS SECTIONS	
PROJECT NAME: FAIR HAVEN-HAMPTON	HIGHWAY NO.: TH 6 BRIDGE NO.: 6
PROJECT NUMBER: BRO 1443(32)	OVER: POULTNEY RIVER
FILE NAME: /str1/93j021/sj021xs.dgn	PLOT DATE: 28-JAN-2003
PROJECT MANAGER: G.S. ROGERS	DRAWN BY: STR1
DESIGNED BY: C. MEUNIER	PARM NAME: sj021mx3.1
BRIDGE SHEET NUMBER:	SHEET 39 OF 53

Metric

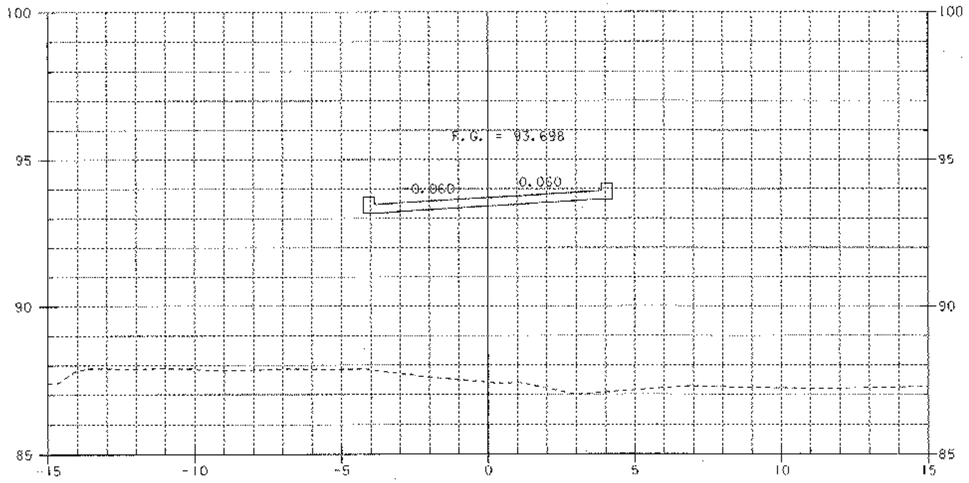

1+090
BRIDGE

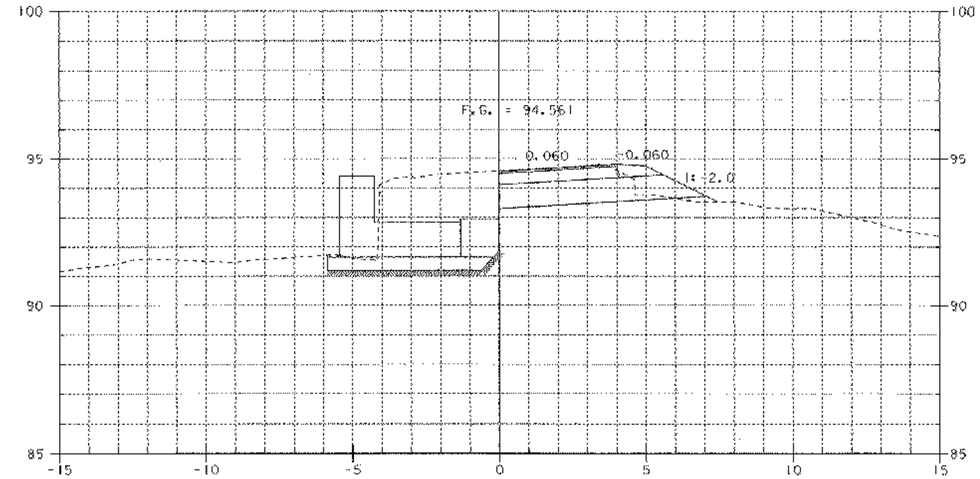

1+107.663
END BRIDGE

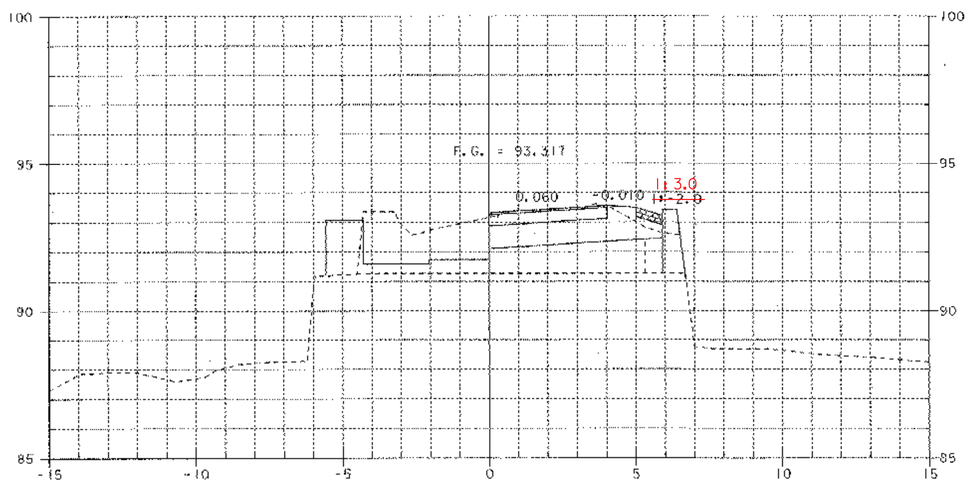

1+082.208
BEGIN BRIDGE

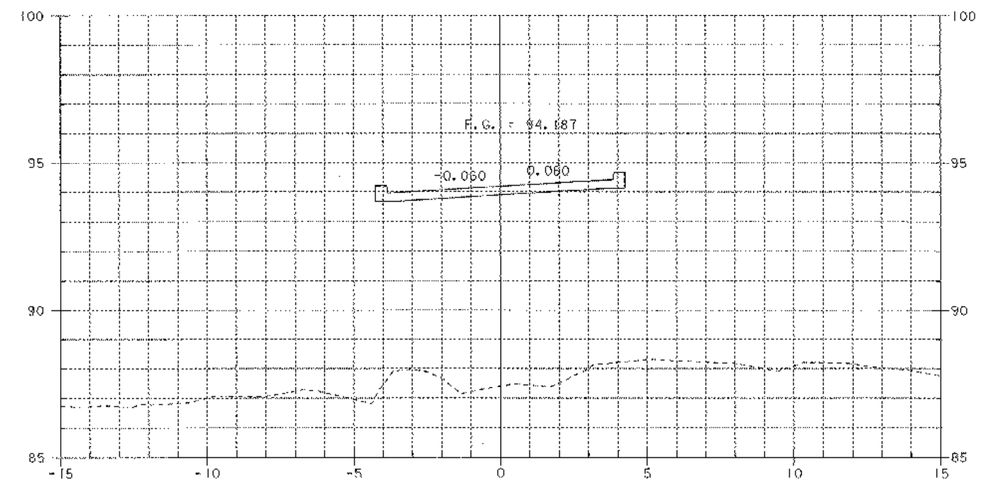

1+100
BRIDGE

SHEET NAME: MAINLINE CROSS SECTIONS	
PROJECT NAME: FAIR HAVEN-HAMPTON	HIGHWAY NO.: TH 6
PROJECT NUMBER: BRO 1443(32)	BRIDGE NO.: 6
	OVER: POULTNEY RIVER
FILE NAME: /strl/93j02l/sj02lxs.dgn	PLOT DATE: 28-JAN-2003
PROJECT MANAGER: G.S. ROGERS	DRAWN BY: STRI
DESIGNED BY: C. MEUNIER	IPARM NAME: sj02lmx5.I
BRIDGE SHEET NUMBER:	SHEET 41 OF 53