Metric

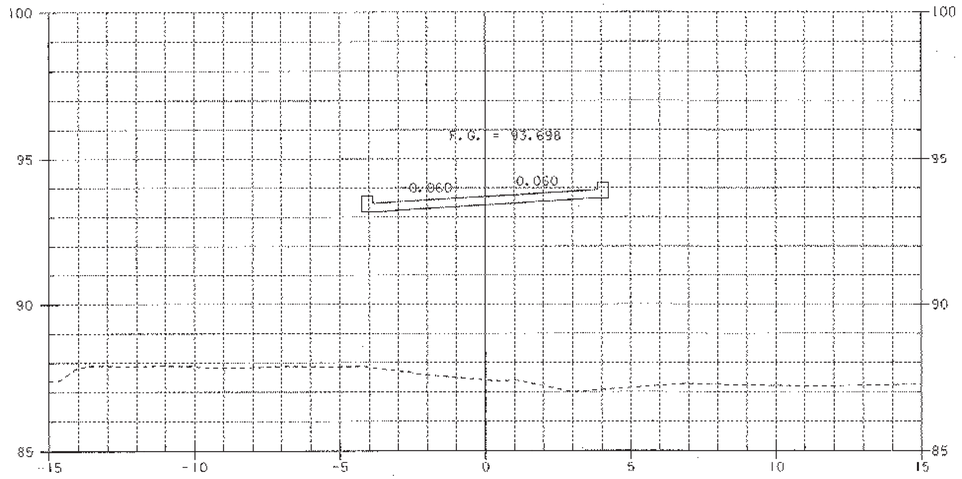

1+090
BRIDGE

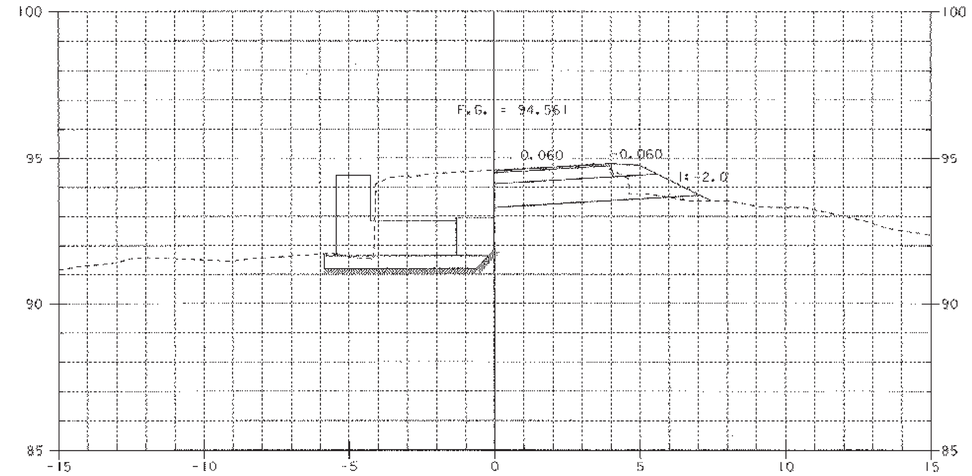

1+107.663
END BRIDGE

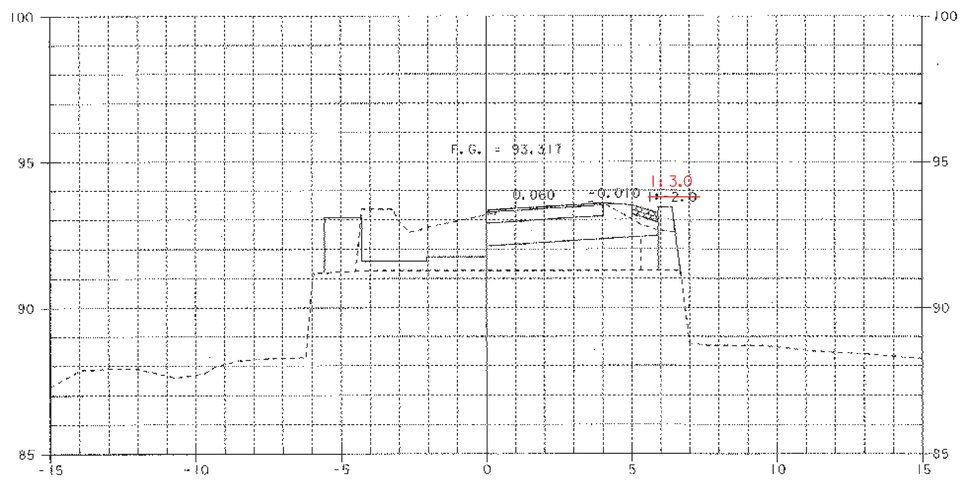

1+082.208
BEGIN BRIDGE

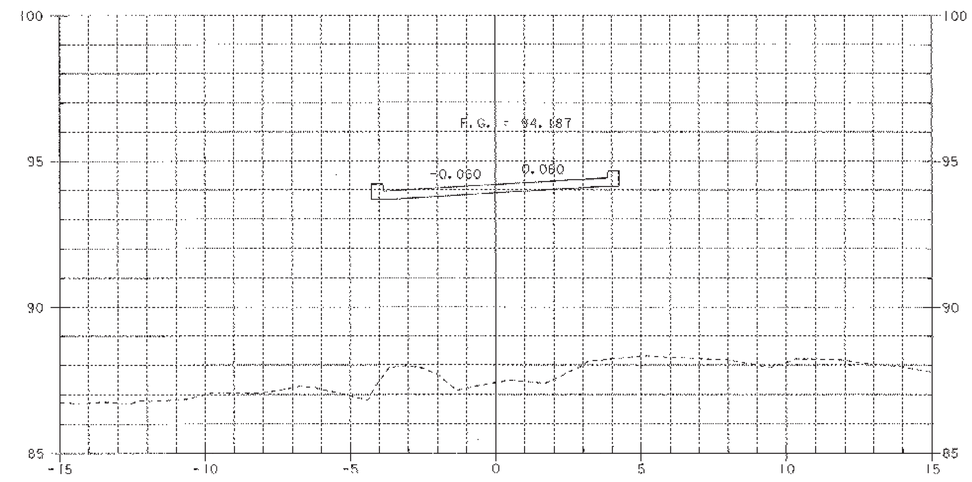

1+100
BRIDGE

SHEET NAME: MAINLINE CROSS SECTIONS	
PROJECT NAME: FAIR HAVEN-HAMPTON PROJECT NUMBER: BRO 1443(32)	HIGHWAY NO.: TH 6 BRIDGE NO.: 6 OVER: POULTNEY RIVER
FILE NAME: /stri/93j021/sj02lxs.dgn PROJECT MANAGER: G.S. ROGERS DESIGNED BY: C. MEUNIER BRIDGE SHEET NUMBER:	PLOT DATE: 28-JAN-2003 DRAWN BY: STRI IPARM NAME: sj02lmx5.I SHEET 41 OF 53