Metric

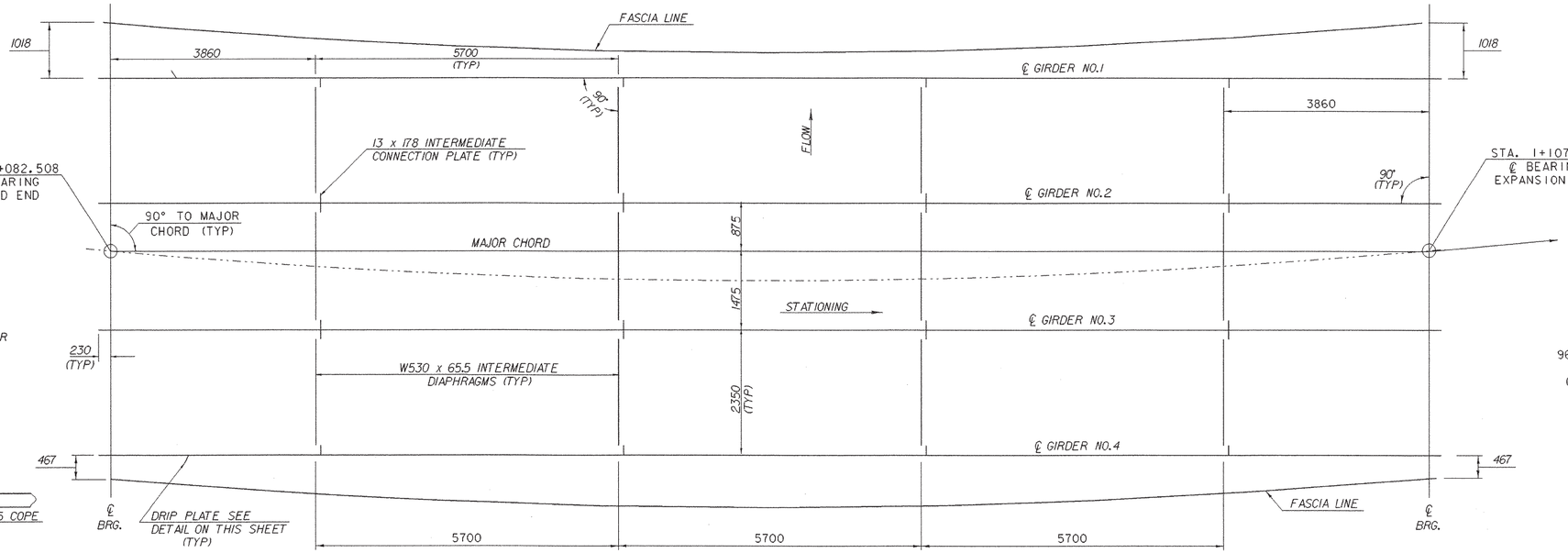

FRAMING PLAN

SCALE: 1:50

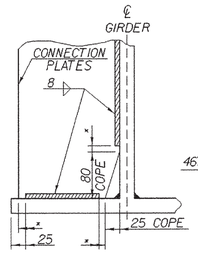

WELD TERMINATION AND COPING DETAILS

SCALE: 1:5

* NO WELD FOR 6 MIN. 15 MAX (EXCEPT MUST MAINTAIN 30 MIN FROM EDGE OF FLANGE.)

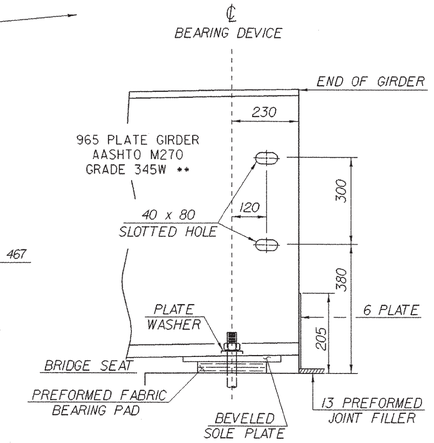

END GIRDER DETAIL

SCALE: 1:10

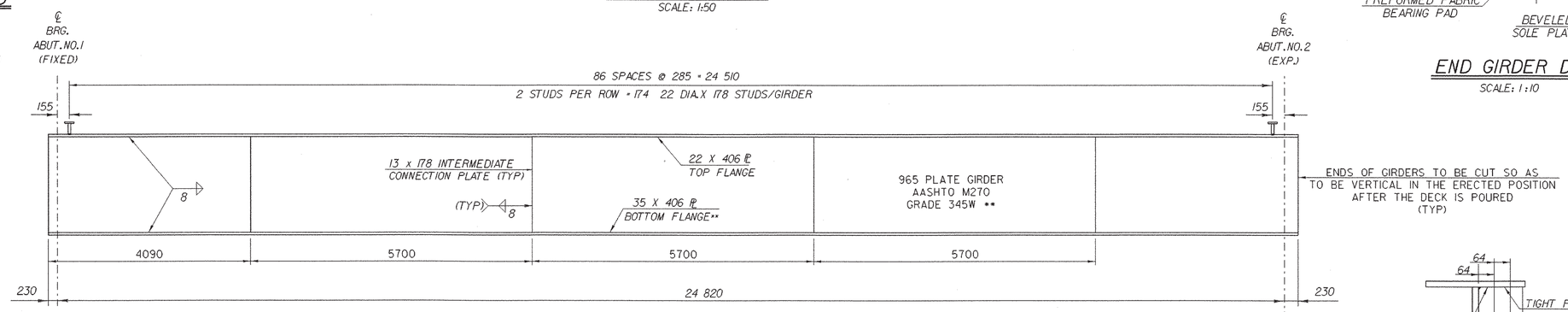

TYPICAL GIRDER ELEVATION

HORIZONTAL SCALE: 1:50
VERTICAL SCALE: 1:25

** PLATE REQUIRES CHARPY V-NOTCH TESTING

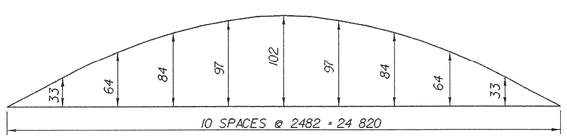

CAMBER DIAGRAM

NTS

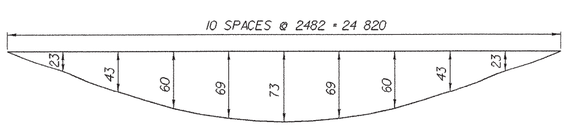

DEAD LOAD DEFLECTION

NTS

NOTE: DEAD LOAD DEFLECTION IS DUE TO GIRDER, DIAPHRAGMS, DECK, CURBS, PAVEMENT AND RAILING.

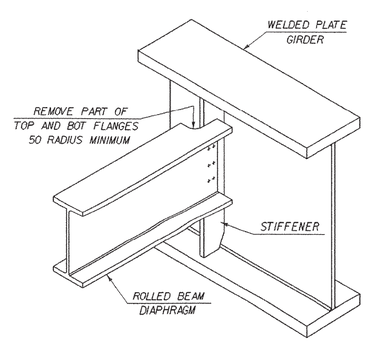

ROLLED BEAM USED AS DIAPHRAGM

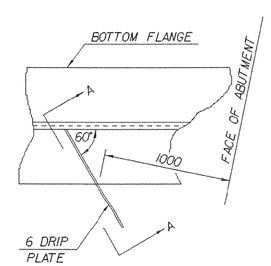

PLAN DRIP PLATE

NOTE: DRIP PLATES SHALL BE PLACED ON THE OUTSIDE EDGE OF FASCIA GIRDERS AS INDICATED ON PROJECT PLANS.

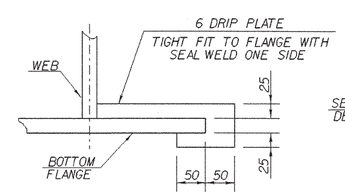

SECTION A - A

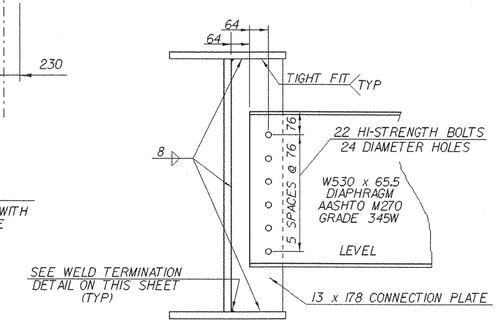

INTERMEDIATE DIAPHRAGMS

SCALE: 1:10

NOTE: HI-STRENGTH BOLTS, NUTS AND WASHERS SHALL CONFORM TO AASHTO DESIGNATION M 164.

SHEET NAME: FRAMING PLAN	
PROJECT NAME: FAIR HAVEN-HAMPTON	HIGHWAY NO.: TH 6
PROJECT NUMBER: BRO 1443(32)	BRIDGE NO.: 6
	OVER: POULTNEY RIVER
FILE NAME: /str1/93j021/sj021sup2.dgn	PLOT DATE: 28-JAN-2003
PROJECT MANAGER: G.S. ROGERS	DRAWN BY: J. GILMORE
DESIGNED BY: C. MEUNIER	IPARM NAME: sj021fp.i
BRIDGE SHEET NUMBER:	SHEET 21 OF 53