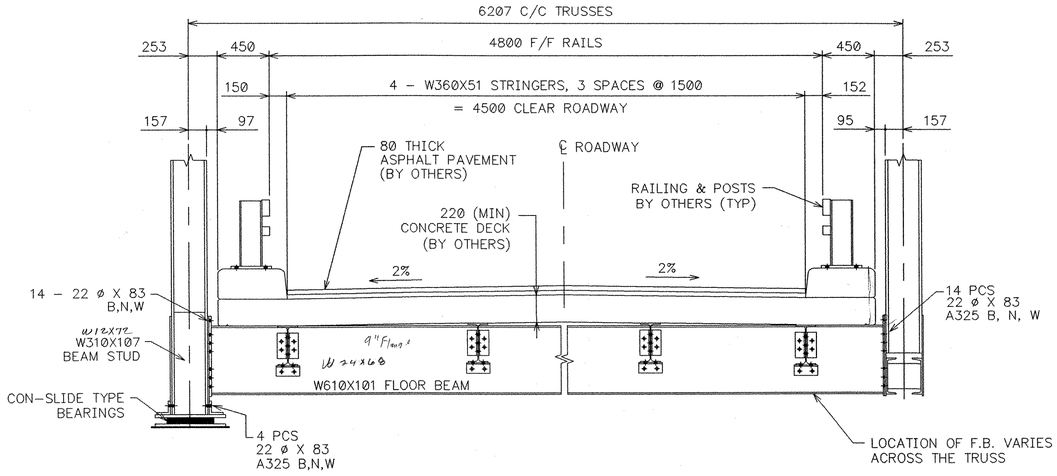

SECTION AT ABUTMENT

SECTION AT FLOOR BEAM

TRUSS BRIDGE SECTION VIEWS

DESIGN DEAD LOADS

CONCRETE DECK	537 kg/m^2	(110 PSF)
FUTURE SURFACE	122 kg/m^2	(25 PSF)
DECK (OPTIONAL)	73 kg/m^2	(15 PSF)
ASPHALT	195 kg/m^2	(40 PSF)
TOTAL	927 kg/m^2	(190 PSF)

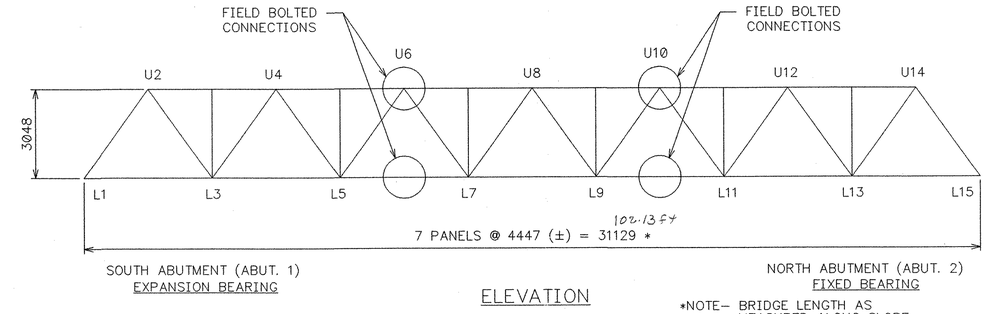

ELEVATION

*NOTE– BRIDGE LENGTH AS MEASURED ALONG SLOPE.

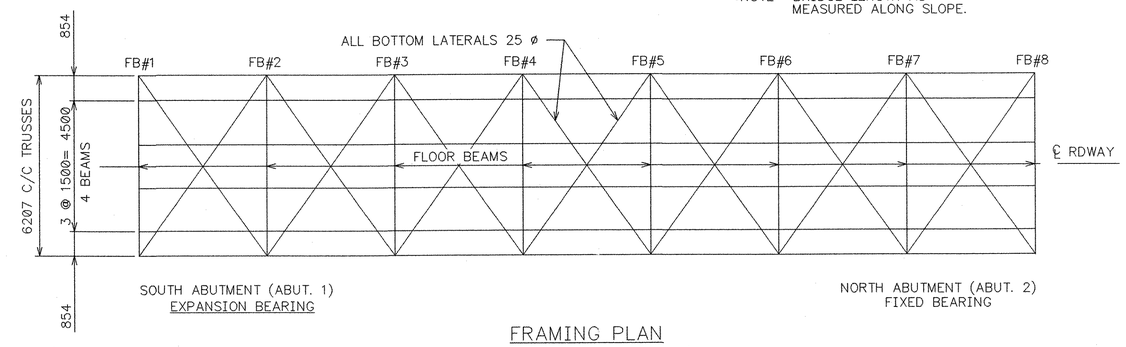

FRAMING PLAN

CAMBER: 49 (DEAD LOAD CAMBER)
49 (TOTAL CAMBER)

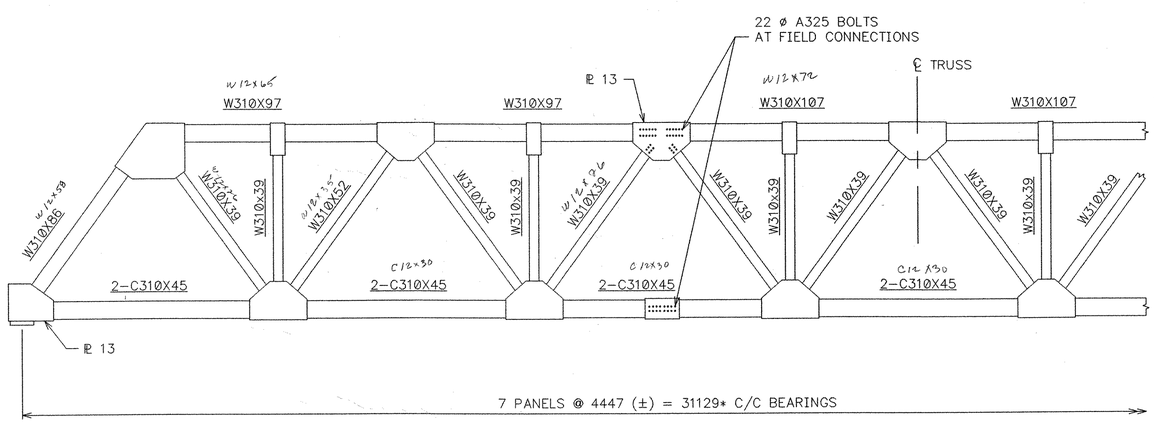

*NOTE– BRIDGE LENGTH AS MEASURED ALONG SLOPE.

TRUSS BRIDGE DETAIL

TRUSS LIFTING WEIGHT – 102.3 kN
(23,000 LBS)

Total 7262 lbs

TRUSS SHOE REACTION

LIVE LOAD	245 kN	(55.0 K)
IMPACT	54 kN	(12.1 K)
DEAD LOAD	523 kN	(117.6 K)
TOTAL	822 kN	(184.7 K)

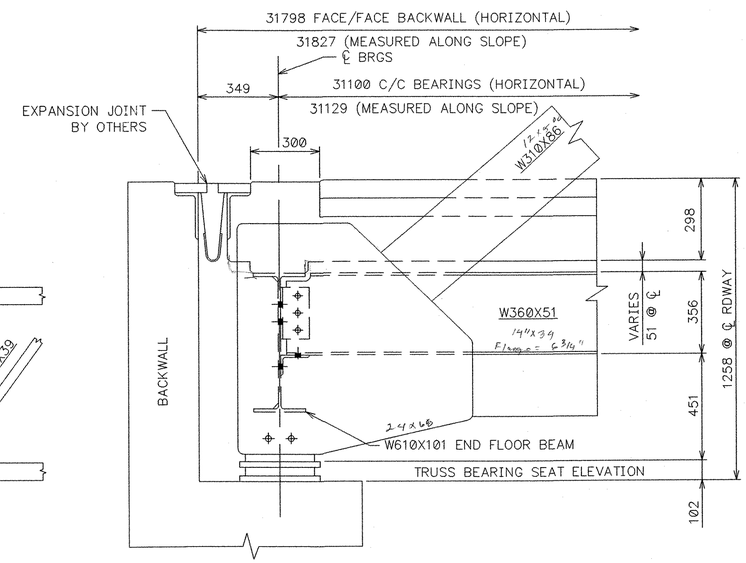

ABUTMENT DETAIL

RECEIVED
CK'D BY ____ OK'D BY Mem
DEC 15 2006
RESUBMIT ____ APPROVED ✓
BY ____ DATE 01-05-07

DESIGN SPECIFICATIONS
AASHTO STANDARD SPECIFICATIONS FOR HIGHWAY BRIDGES, 17th EDITION (2001), DIVISION I, WITH ALL INTERIM SPECIFICATIONS IN EFFECT.

LIVE LOAD
AASHTO ML 22.5 (HS25–44)

MATERIAL
ALL STRUCTURAL STEEL , INCLUDING BEARINGS, SHALL SHALL BE ASTM A709, GRADE 345 (A572, 50 ksi). ALL STEEL GALVANIZED AFTER FABRICATION. ALL CONTACT SURFACES SHALL BE LIGHTLY BRUSHED OR BLASTED PRIOR TO ASSEMBLY TO A DULL GRAY APPEARANCE.

ALL FASTENERS UNLESS NOTED OTHERWISE, SHALL BE 22 ø HIGH STRENGTH BOLTS, ASTM A325M TYPE 1 (GALV) WITH ASTM A563 GRADE C NUT AND ONE ASTM F436 WASHER PER BOLT. FASTENERS SHALL BE FURNISHED WITH ROTATIONAL CAPACITY TESTS.

CONSTRUCTION/FABRICATION
AASHTO STANDARD SPECIFICATION FOR HIGHWAY BRIDGES, 17th EDITION (2001), DIVISION II, WITH ALL INTERIM SPECIFICATIONS IN EFFECT

WELDING
SEAL WELD ALL CONNECTIONS, WHEN POSSIBLE, PRIOR TO GALVANIZING. ALL WELDING SHALL BE IN ACCORDANCE WITH AASHTO/AWS D1.5 BRIDGE WELDING CODE AND THE AASHTO FRACTURE CONTROL, WHERE APPLICABLE.

NON–DESTRUCTIVE TESTING OF WELDS SHALL BE PERFORMED AS FOLLOWS:
FILLET WELDS – VISUAL. 100%
– MT 10% (300mm IN EVERY 3000mm)

WELD MEMBERS TO GUSSET PLATES WITH MINIMUM 8mm FILLET WELDS AT EACH END OF EACH MEMBER.
ALL GUSSET PLATES 10mm THICK EXCEPT AS NOTED WITH SUFFICIENT FLAT AREAS TO RESIST STRESSES AND SO SHAPED TO PRODUCE AN AESTHETIC ARCHITECTURAL APPEARANCE.

NOTE: DRAWINGS RELATIVE DO NOT SCALE

ALL DIMENSIONS ARE IN MILLIMETERS

NO:	DATE:	REVISIONS:	BY:
1	12/8/06	GENERAL NOTES REVISED	JEC
2	12/8/06	SECTION VIEW REVISED	JEC
3	12/8/06	C/C BEARINGS REVISED	JEC

12/12/06

31.10M TRUSS BRIDGE 4.50M ROADWAY
BRIDGE NO. 45, TOWN OF CAVENDISH
WINDSOR COUNTY, VERMONT

DESIGN:	DRAWN:	DATE:	DRAWING NO:	SHEET
AG	DMK	09/08/06	Cavendish_Metric 102X14_FlatTruss.dwg	1 OF 5
CHECK/DATE 10/05/06	FABRICATOR OHIO BRIDGE CORP.			

06455