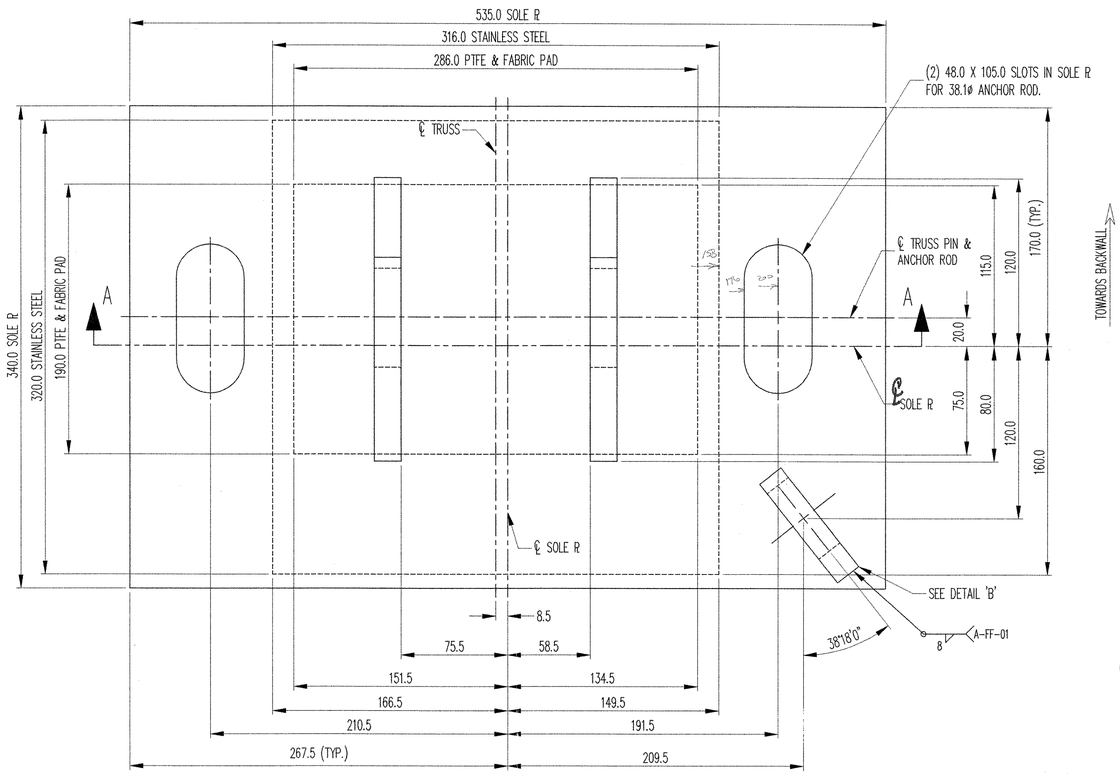

PLAN VIEW

EXPANSION PREFORMED FABRIC BEARING
1 ~~(2)~~ REQ'D @ ABUT. 2, TRUSS UPSTREAM

LOAD TABLE INFORMATION

LOAD DATA	
MAX DL + SDL REACTION (KIPS)	--
MAX LL (W/O I) REACTION (KIPS)	--
MAX DL+SDL+LL REACTION (KIPS)	--

PLEASE PROVIDE. WILL NEED FOR TESTING.

TRUSS PINS & CLEVIS PINS SUPPLIED BY OTHERS.

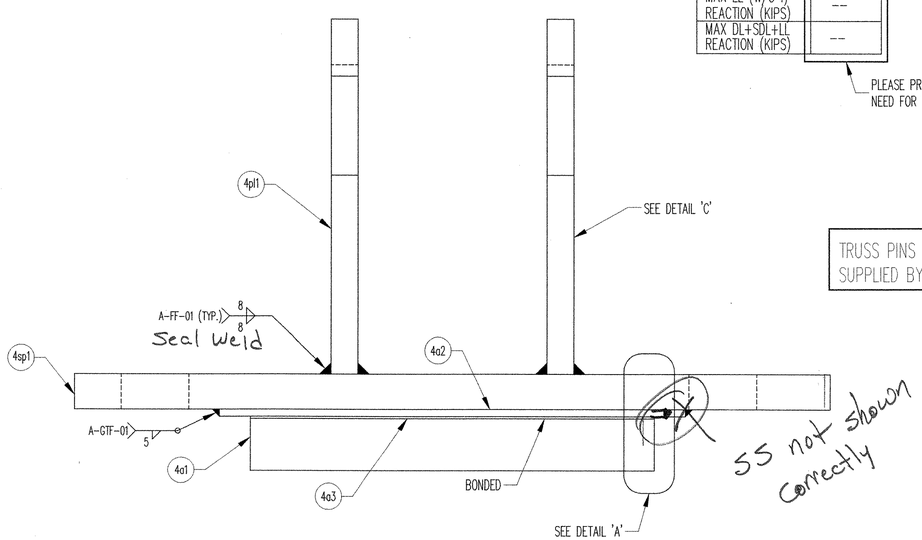

SECTION 'A-A'

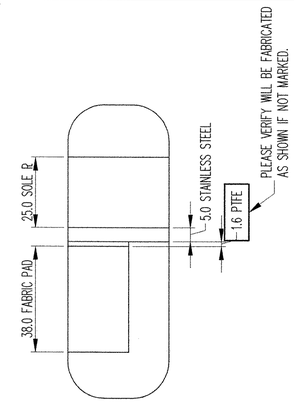

DETAIL 'A'

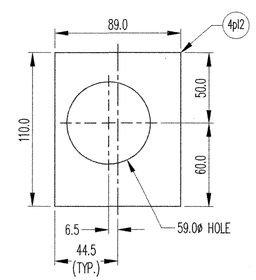

DETAIL 'B'

TOWARDS BACKWALL

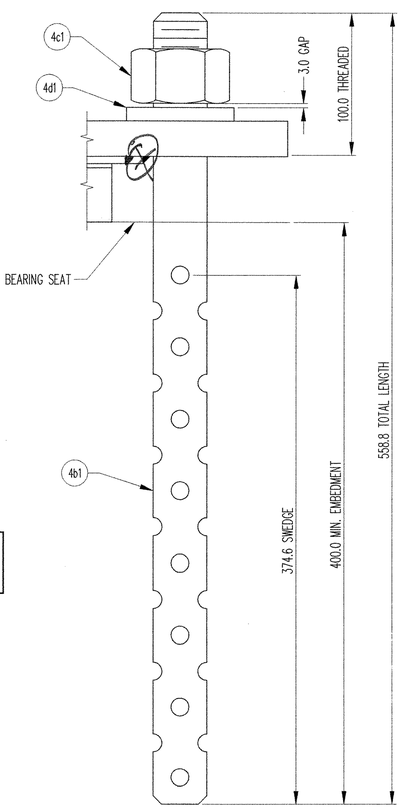

ANCHOR ROD DETAIL

MK	QTY.	DESCRIPTION	MATERIAL	LENGTH	REMARKS	PART NO.
4A	1	PREFORMED FABRIC BEARING	731.01			
4a1	1	38.0 X 286.0	VT ~~787.07~~	190.0	~~(AASHTO 18.4.10.1)~~	
4a2	1	5.0 X 316.0	A240, TYPE 304	320.0	#8 MIRROR FINISH; PLAIN	
4a3	1	1.6 X 286.0	PTFE	190.0	PURE VIRGIN UNFILLED	
4pl1	2	19.0 X 200.0	A709 GR 345	250.0	(AASHTO M270 GR 345), CLIP CORNER; A123-HDG	
4pl2	1	19.0 X 89.0	A709 GR 345	110.0	(AASHTO M270 GR 345); A123-HDG	
4sp1	1	25.0 X 535.0	A709 GR 345	340.0	(AASHTO M270 GR345); A123-HDG	
4B	2	SWEDGE ANCHOR ROD				
4b1	2	38.1ø X 558.8	A36		(AASHTO M183), 374.6 SWEDGE, 100.0 THREADED; A153-HDG	
4C	2	HEAVY HEX NUT				
4c1	2	38.1ø	A563-DH/A194-2H		(AASHTO M291-DH/M292-2H), SEE NOTE 7; A153-HDG	
4D	2	WASHER PLATE				
4d1	2	9.5 X 76.2	A36	152.4	41.3 DIA. HOLE; A153-HDG	

NOTE: ALL DIMENSIONS IN MILLIMETERS, UNLESS OTHERWISE NOTED.

NOTE: ALL MATERIAL SPECIFICATION DESCRIPTIONS ARE ASTM, UNLESS OTHERWISE NOTED.

TOWARDS BACKWALL

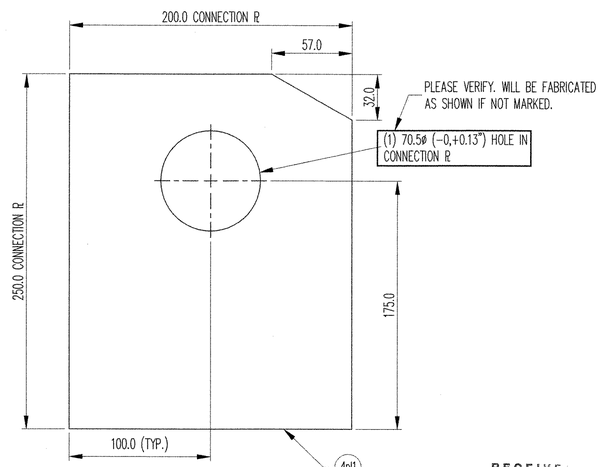

DETAIL 'C'

RECEIVED
CK'D BY_____ OK'D BY_____
APR 29 2004
RESUBMIT_____ APPROVED As Noted
BY RJW DATE 5-12-04

FOR GENERAL NOTES SEE SHEET GN1.

REV.	DESCRIPTION	DATE	DET.	CKD.

D.S. BROWN
300 E. CHERRY STREET
NORTH BALTIMORE, OHIO 45872
419.257.3561
FAX: 419.257.0332
4201 NOREX DRIVE
CHASKA, MINNESOTA 55318
952.368.3000
FAX: 952.448.7000
DSBROWN.COM

LOCATION — T.H. 4 OVER BLACK RIVER CAVENDISH
BRIDGE — 12
PROJECT — BHO 1442 (22)
F.A.P. NO. — -
P.O. NO. — -
DESIGNER — VANASSE HANGEN BRUSTLIN, INC.
CUSTOMER — MILLER CONSTRUCTION

ITEM	QUANTITY
11091-1106-4	1 of 2
–	–
–	–
–	–
–	–
–	–
–	–
–	–
–	–
–	–

DESCRIPTION: PREFORMED FABRIC BEARING
WINDSOR COUNTY, VERMONT

SCALE:	DRAWN BY:	CHECKED BY:	DATE:	
N.T.S.	B.COPPUS	E.KELLEY	4/22/04	–

PROJECT NUMBER	PRODUCT CODE	RELEASE	SHEET
11091	1106	1	04

04483