REVISIONS				
ZONE	REV	DESCRIPTION	DATE	APPROVED
- -	A	PER ENGINEER'S MARK	9/29/06	C.A.M.
- -	B	PER ENGINEER'S MARK	11/17/06	C.A.M.
- -	C	PER ENGINEER'S MARK	2/13/07	C.A.M.

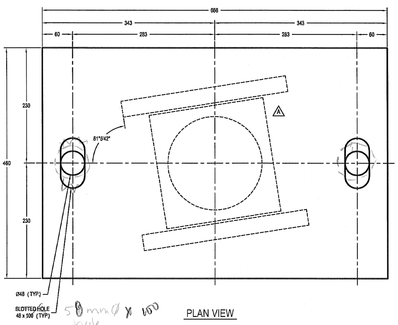

PLAN VIEW

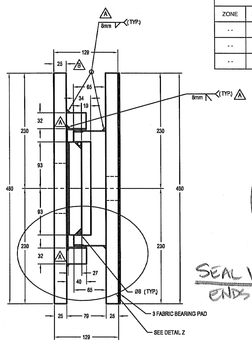

SIDE VIEW

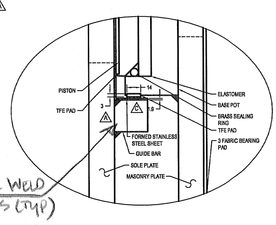

DETAIL Z

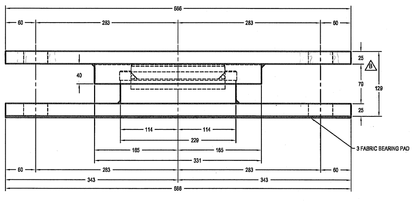

ELEVATION VIEW
ABUTMENT 1, GIRDER 4
VERTICAL LOAD CAPACITY = 650kN
QTY. REQ'D = 1

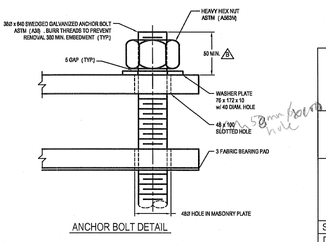

ANCHOR BOLT DETAIL

RECEIVED
FEB 2 3 2007

NOTES.
1. REFERENCE SHEET 7 OF 7 FOR BEARING NOTES.

SUNDERLAND
PROJECT NO, BRF 0114(2)
HIGHWAY NO, TH 3, BRIGDE NO. 13
OVER ROARING BRANCH

GUIDED POT BEARING DETAIL

AMSCOT
STRUCTURAL PRODUCTS CORP.
DOVER, NJ

SCALE: N.T.S.	APPRVD: B.F.	DRAWN BY: C.A.M.
DATE: 9/27/06		REVISION: C
FOR: PETRICCA CONSTRUCTION COMPANY		
DWG NO: PC06A5RC		SHEET NO. 5 OF 7