Metric

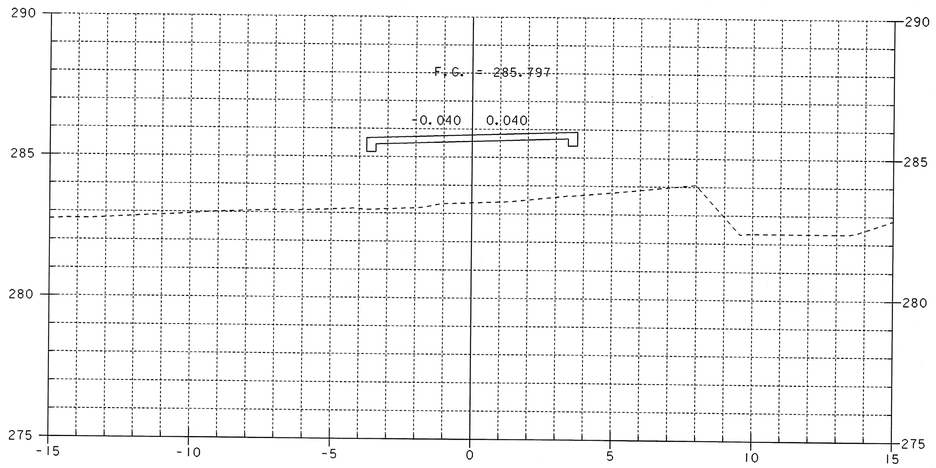

3+630

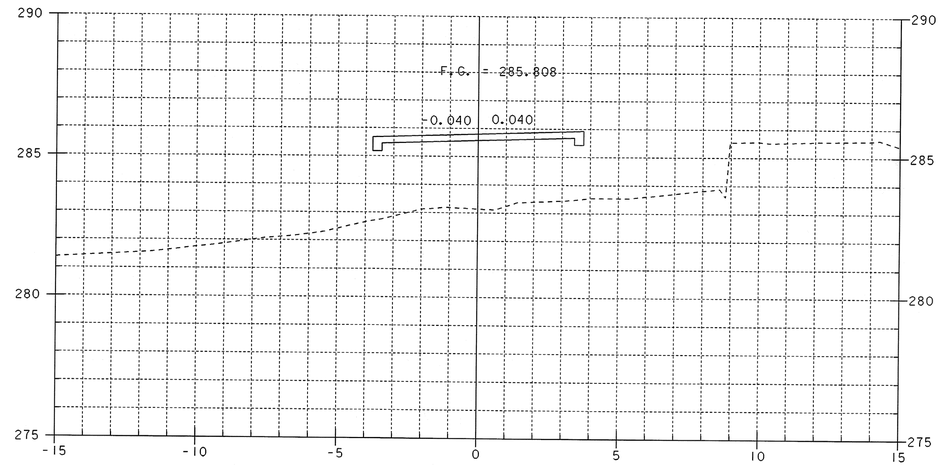

3+650

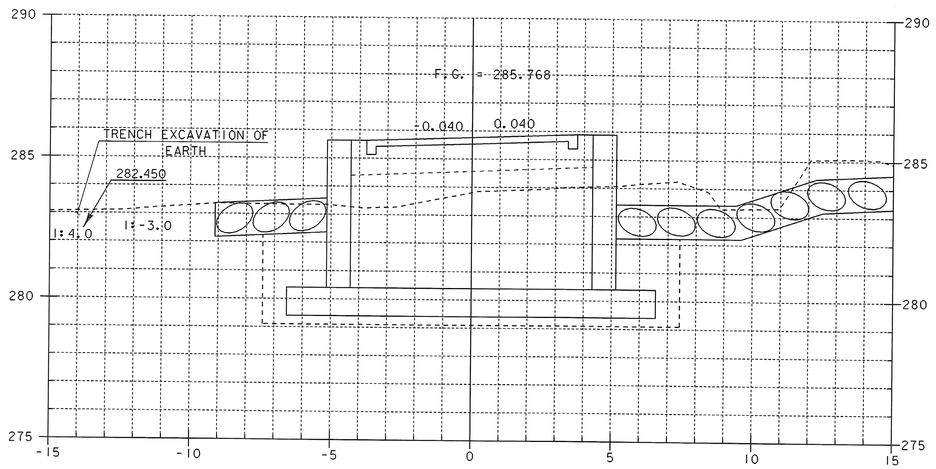

STA. 3+627.000
BEGIN BRIDGE

3+627

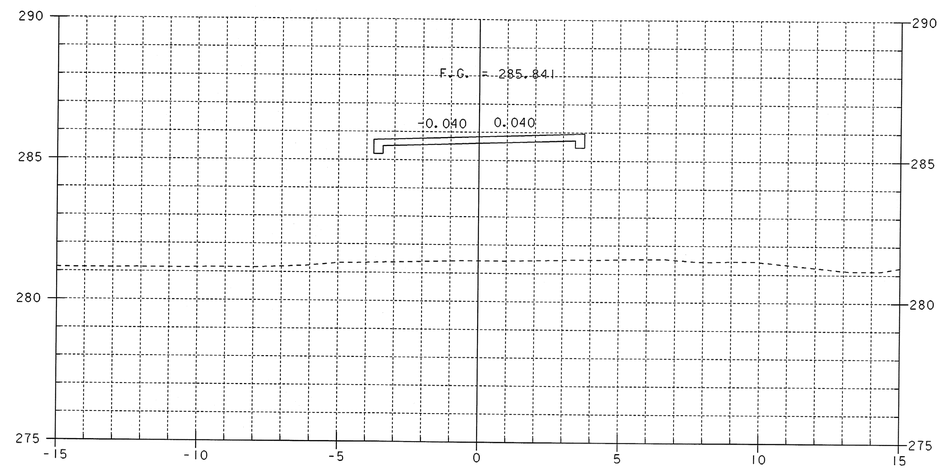

3+640

SHEET NAME: MAINLINE CROSS SECTIONS	
PROJECT NAME: SUNDERLAND PROJECT NUMBER: BRF 0114(2)	HIGHWAY NO.: TH 3 BRIDGE NO.: 14 OVER: ROARING BRANCH
FILE NAME: /PW/93j009/sj009xs.dgn PROJECT MANAGER: R. R. WHITCOMB DESIGNED BY: C. CARLSON	PLOT DATE: 14-DEC-2005 DRAWN BY: J.GILMORE IPARM NAME: sj009mx4.i SHEET 57 OF 67