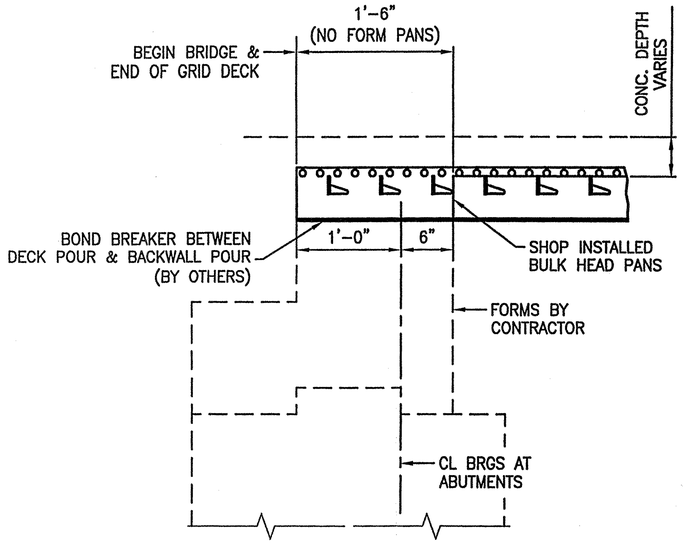

SECTION A-A

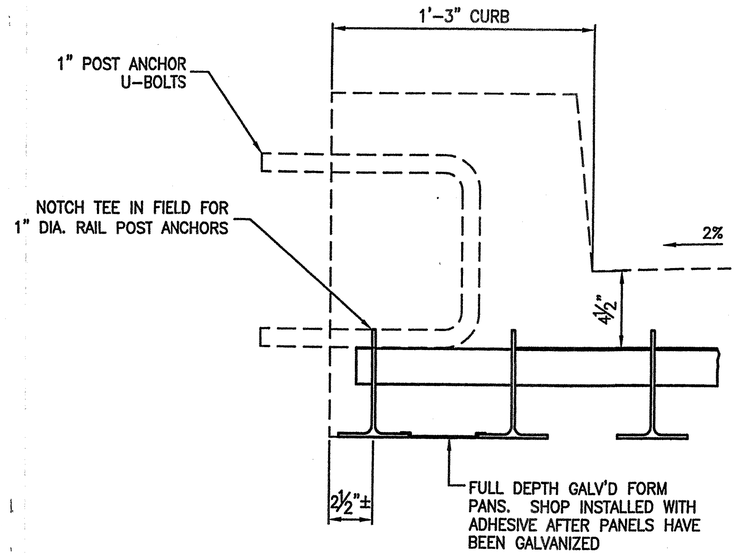

SECTION B-B

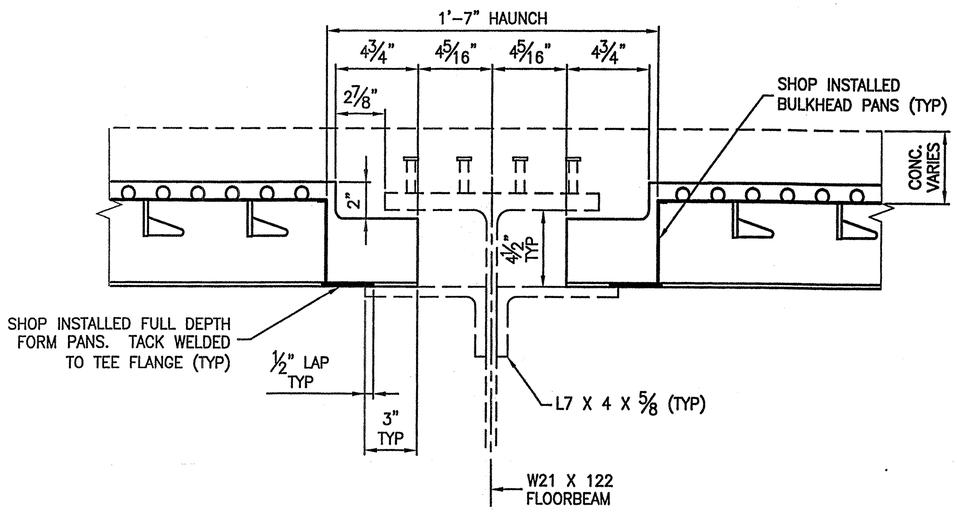

SECTION C-C
(TYPICAL SECTION THRU FLOORBEAMS)

REVIEWED
CPM CONSTRUCTORS

COMMONWEALTH OF PENNSYLVANIA
REGISTERED PROFESSIONAL ENGINEER
MICHAEL A. REINA
No. 059334-E
5/9/07

REV	DESCRIPTION	BY	DATE	CHK'D.

APPROVED: _____ REV'D APPR. _____ DRAWING _____

L. B. FOSTER CO.
GENERAL OFFICES
PITTSBURGH, PENNSYLVANIA 15220

FOR: CPM CONSTRUCTORS
VERMONT AGENCY OF TRANSPROTATION
TOWN OF ST. JOHNSBURY, COUNTY OF CALEDONIA
T.H. 85 (CL.3) BRIDGE 29 OVER THE PASSUMPSIC RIVER
SECTIONS AND DETAILS

MADE RLP DATE 4/10/07 JOB NO. SD0181 CUST. NO. 089BG
CHECK BLJ DATE 4/30/07 DRAWING LBE2 REV. NO. _____