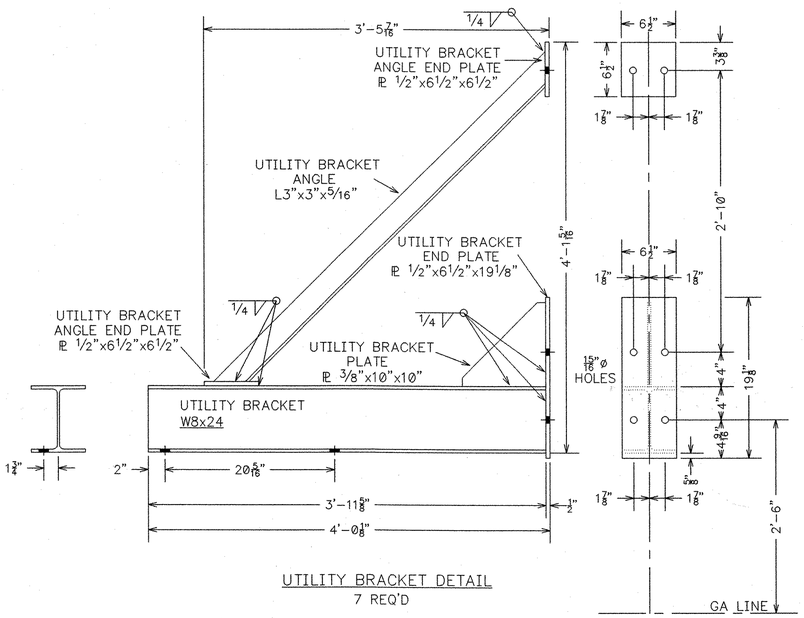

UTILITY BRACKET DETAIL
7 REQ'D

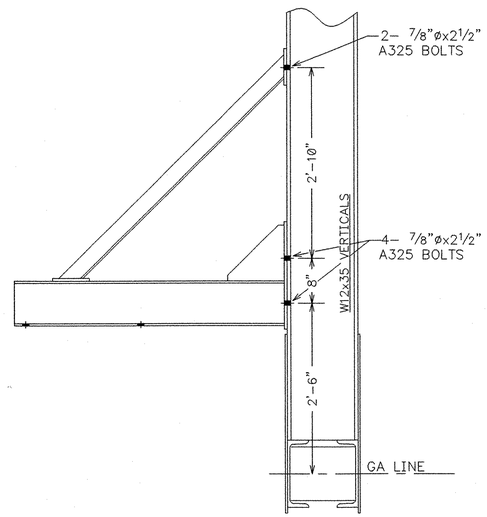

UTILITY BRACKET LOCATION DETAIL @ TRUSS 1

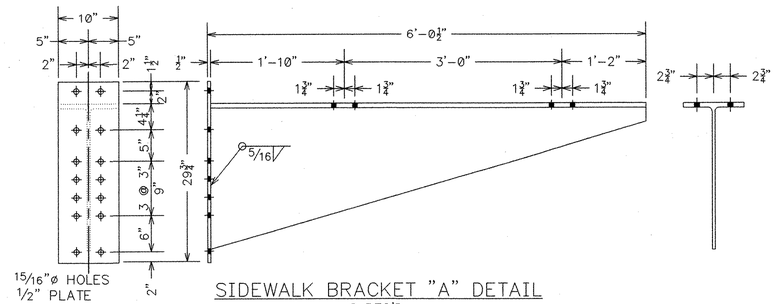

SIDEWALK BRACKET "A" DETAIL
2 REQ'D
GALVANIZED

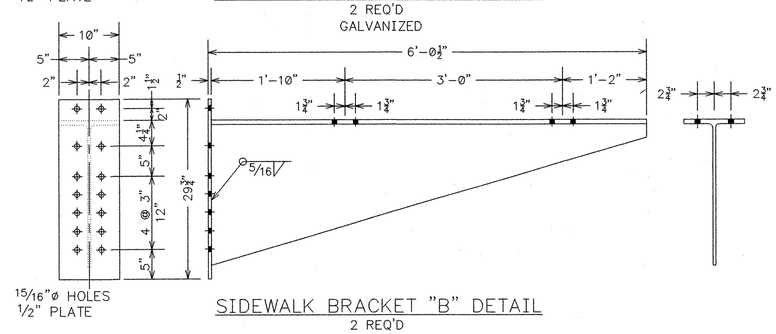

SIDEWALK BRACKET "B" DETAIL
2 REQ'D
GALVANIZED

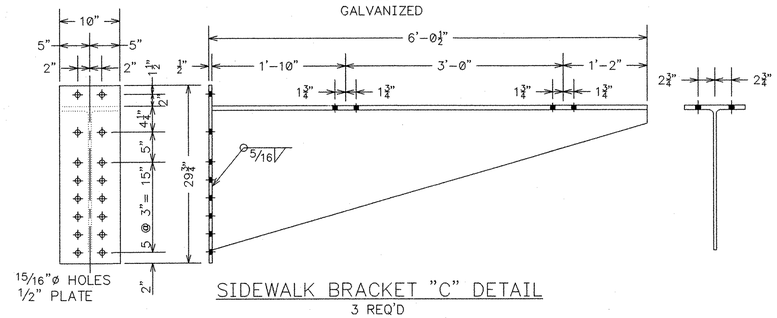

SIDEWALK BRACKET "C" DETAIL
3 REQ'D
GALVANIZED

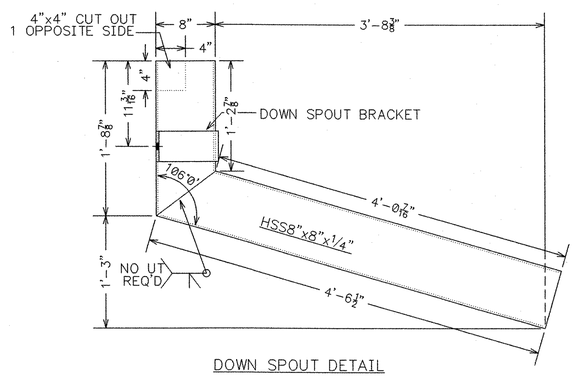

DOWN SPOUT DETAIL
1 REQ'D

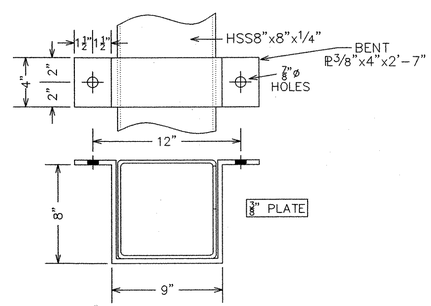

DOWN SPOUT BRACKET DETAIL
1 REQ'D

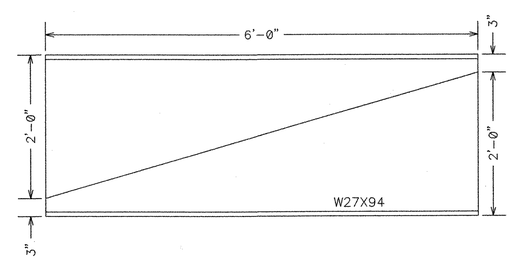

SIDEWALK BRACKET CUTTING DETAIL
4 REQ'D
GALVANIZED

RECEIVED
CK'D BY TAS CK'D BY
NOV 13 2004
RESUBMIT APPROVED
BY DATE 12-14-04

FABRICATOR: U.S. BRIDGE
CONTACT: 201 WHEELING AVE.
P.O. BOX 757
CAMBRIDGE, OHIO 43725
1-888-872-7434

NO.	DATE	REVISIONS	BY
1	11/29/04	WELD SYMBOLS REVISED	JEC

112'-5" TRUSS BRIDGE — 21'-0" RDWY + 6' SW
GRANITE STREET — PROJ. NO. HDP 9281(1)
CITY OF BARRE — BRIDGE # 11
WASHINGTON COUNTY, VERMONT

DESIGN	DRAWN	DATE	DRAWING NO.	SHEET
SAF	JEC	OCTOBER 20, 2004	BRACKETS	4 OF 11
CHECK/DATE AG 10/8/04	FABRICATOR U.S. BRIDGE			073 53

NOTE: DRAWINGS RELATIVE DO NOT SCALE