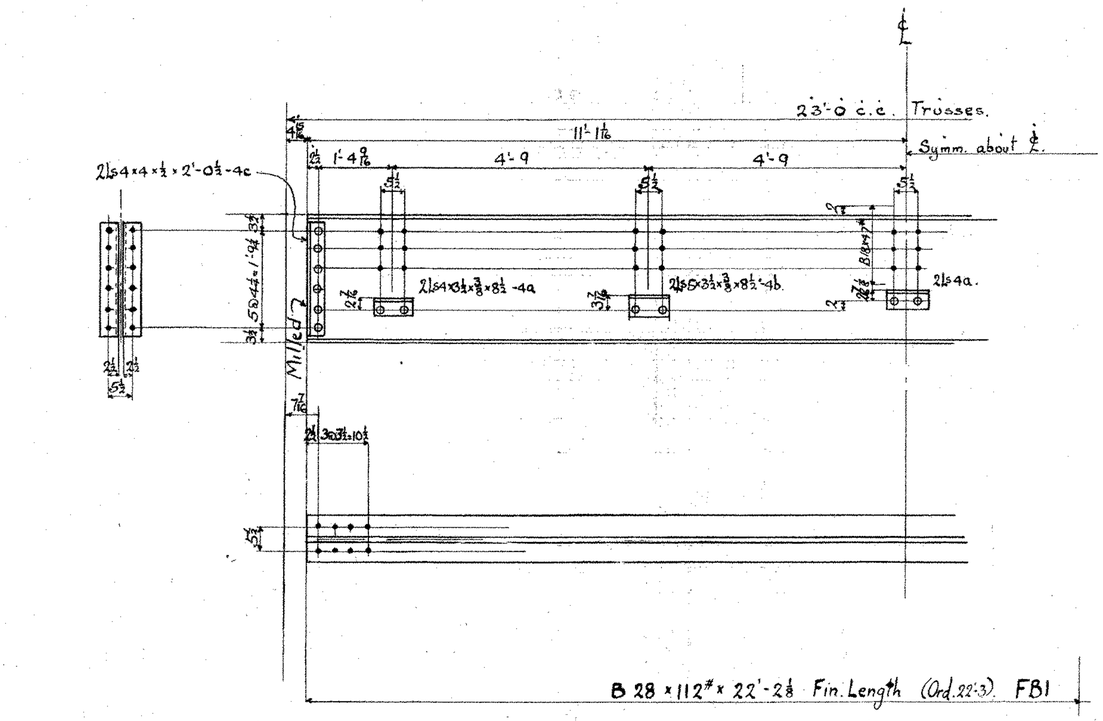

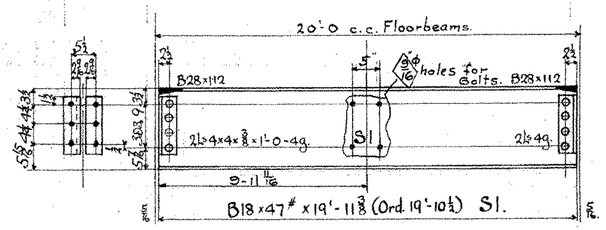

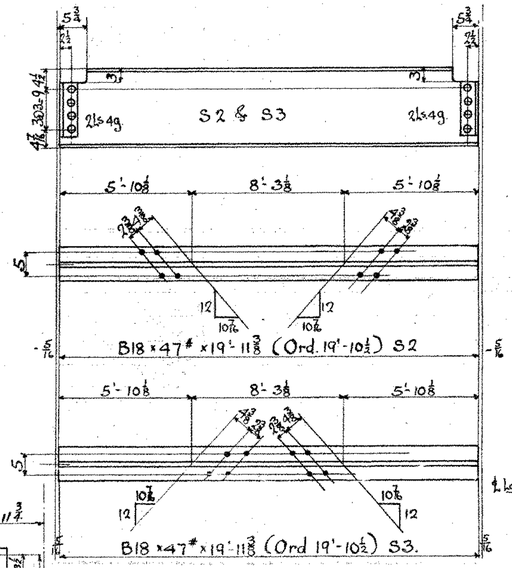

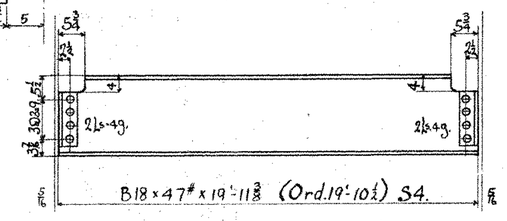

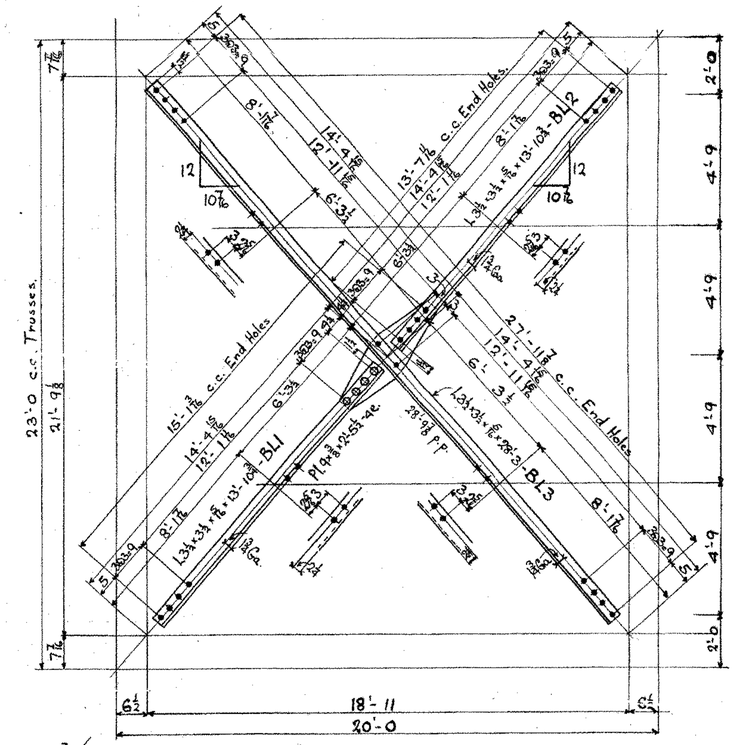

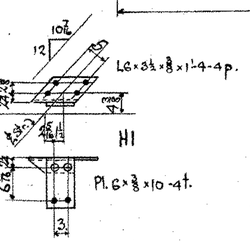

Required List

6	Floorbeams	FB1
One	"	FB2R
14	Stringers	S1
7	"	S2
7	"	S3
7	"	S4
7	Bottom Laterals	BL1
7	" "	BL2
7	" "	BL3
2	" " "	BL5R
2	" " "	BL5L
14	Hangers	H1R
14	"	H1L
One	Floorbeam	FB2L

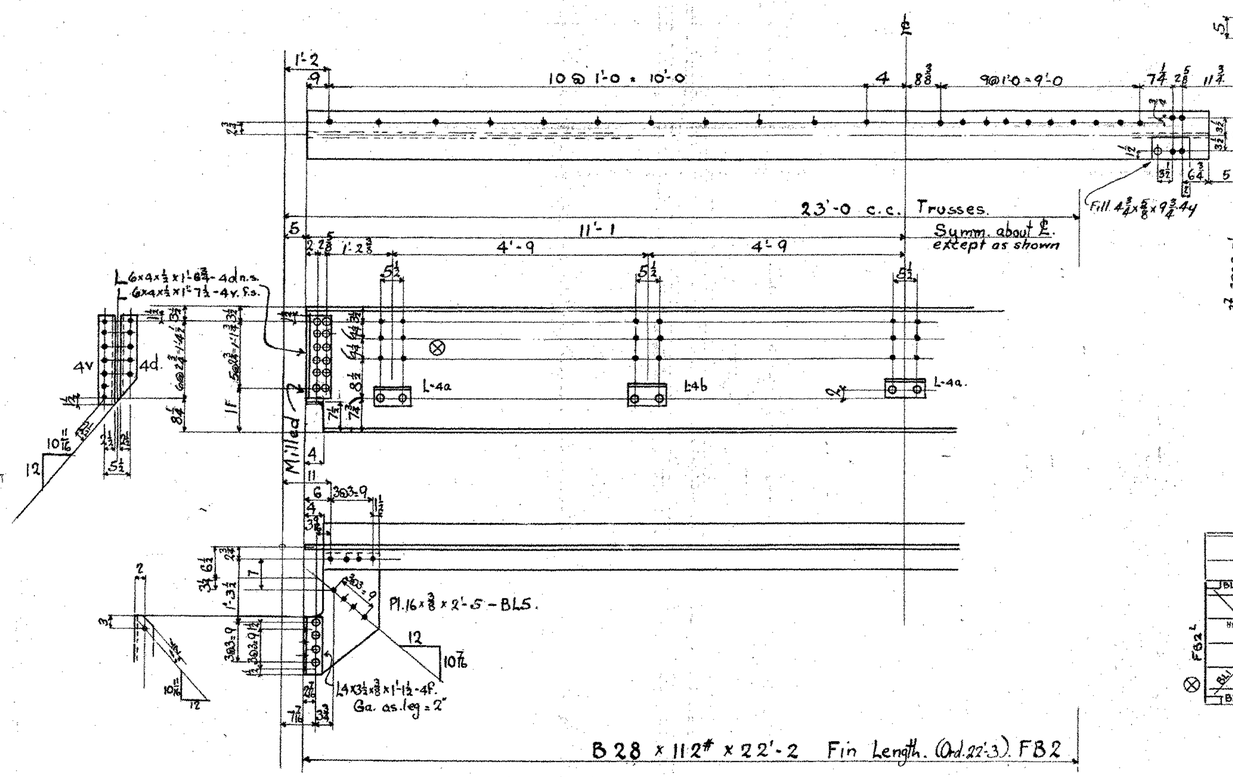

Note:-
Re entrant cuts to be filleted by drilling

Notes:-
Specifications. Std. Spec. for Steel Highway Bridges.
U.S. Dept. of Agriculture Dept. Bulletin #1269
Rivets ⅞ϕ
Open Holes 15/16 ϕ except as noted.
Holes in material ¾ inch or less in thickness may be punched full size
Holes in material more than ¾ thick shall be subpunched & reamed, or drilled from the solid.
Truss members shall be assembled in shop & holes for field connections shall be reamed or drilled while so assembled & the members match-marked.
Floorbeam & stringer connections to be subpunched & reamed to a metal templet not less than 1" thick or reamed while assembled.
Field connections for laterals & sway bracing punched full size.

Shop Paint:- One coat of Dutch Boy Red Lead.

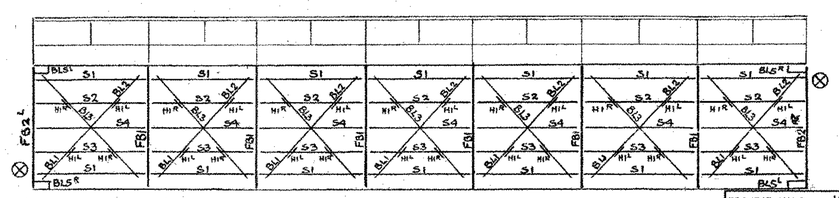

Marking Diagram.

BETHLEHEM STEEL COMPANY
Fabrication and Erection Dept. BETHLEHEM, PA.

DETAIL OF Floorbeams, Stringers & Bottom Laterals.
STRUCTURE Railroad St. Bridge over Lamoille River.
CUSTOMER Ring Const. Co. Bridge #3

SHOP PAINT See Note.
RIVETS OPEN HOLES UNLESS NOTED

DRAWN BY	DATE	CHECKED BY	DATE	SQUAD
R. MacL.	2/29/28	Cato	3-12-28	Croll

REVISIONS No.	DATE	BY	DESCRIPTION
1	3-22-28	J.F.T.	Cut on L4f

PROJECT NAME: JOHNSON
PROJECT NUMBER: BHO 1448(18)
HIGHWAY NO.: TH 2
BRIDGE NO.: 6
OVER: THE LAMOILLE RIVER

FOR INFORMATIONAL PURPOSES ONLY
SHEET 70 OF 73

Adv. Bill #4

FILE F7297 CONT.-EE 2884 DWG. #4