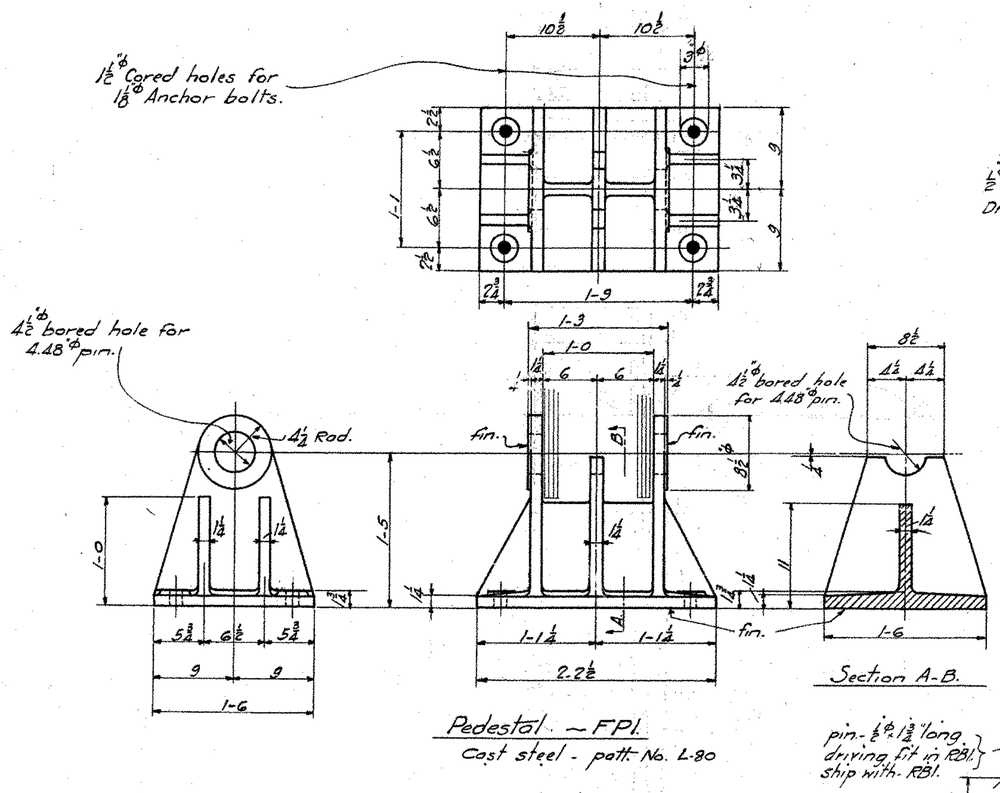


Pedestal - FPI.
Cast steel - patt. No. L-80

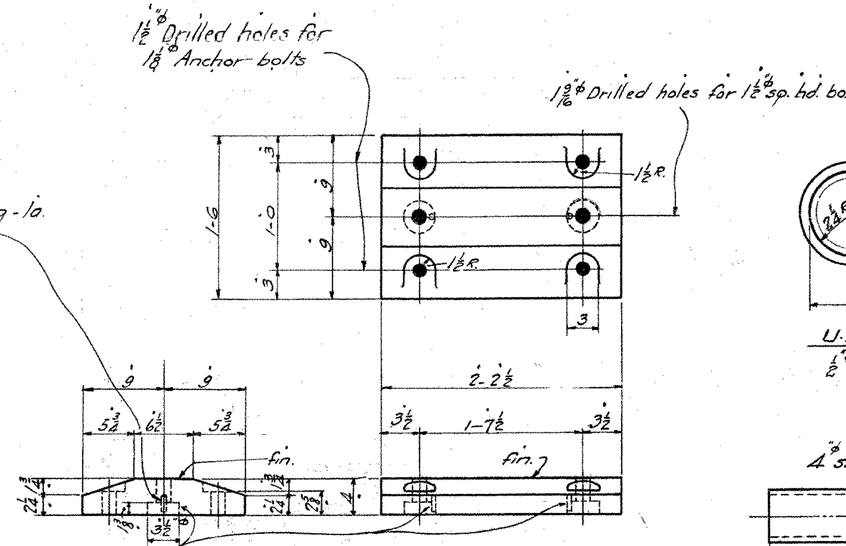


Rocker Base - RBI.
18 × 4 × 2-2½ steel slab.
(plane from 18 × 4½).

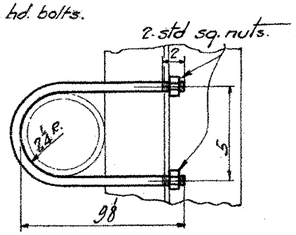


U-Bolt - UBI.
½" ϕ rod × 1-9½ long. steel.

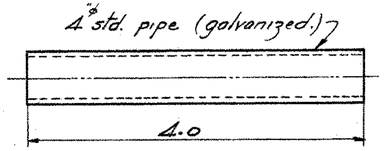


Drain Pipe - DPI.

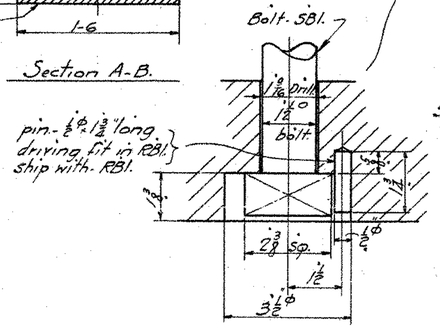


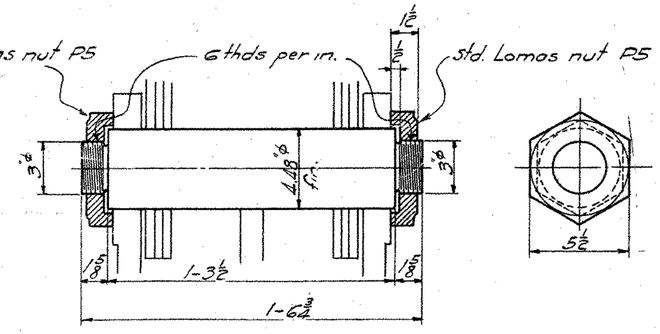


Pin - PLI - with 2 std. Lomas nuts P5.
(pin 4.48" × 1-6¾) fin all over.

Required List.

| | |
|---|---|
| 2 - Pedestals | FPI |
| 2 - Rockers | RSI |
| 2 - Rocker Bases | RBI |
| 4 - Pins | PLI |
| 8 - Std. Lomas nuts P5 - (ship with PLI.) | |
| 16 - Anchor bolts | ABI. (with hex nuts & washers) |
| 28 - U-Bolts | UBI. (with sq nuts.) |
| 14 - Drain Pipes | DPI (4" ϕ std pipe galv.) |
| 4 - Pin ½" ϕ × 1¾ lg - 1a | (ship with RBI.) |
| 4 - Sq. hd. bolt | SBI. (with hex nut & washer) |

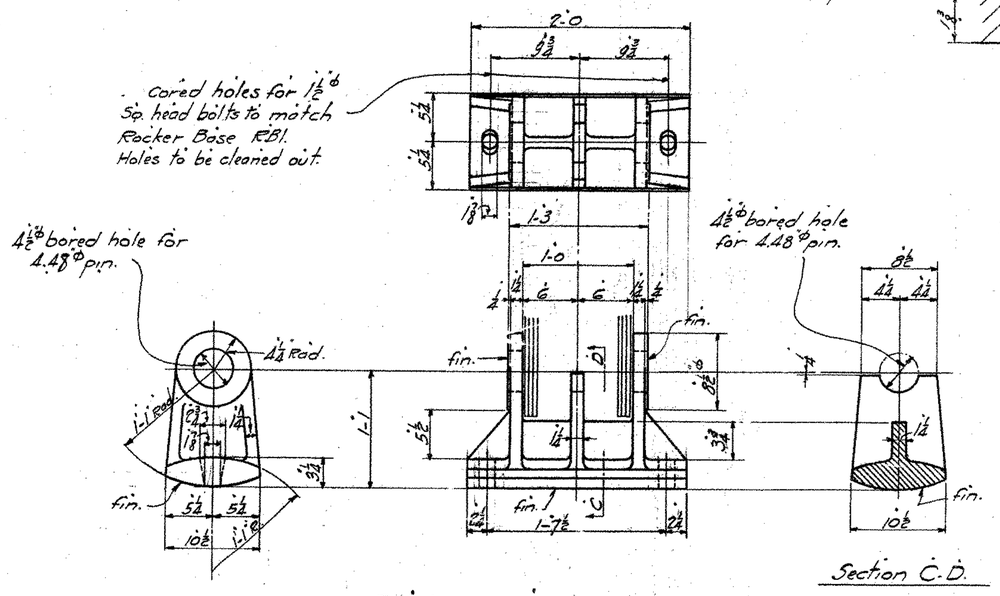


Rocker - RSI
Cast steel - patt. No. L-81

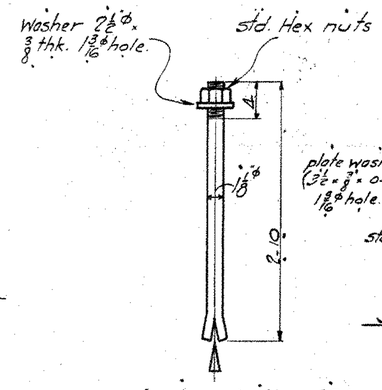


Anchor bolts - ABI.
(1⅛" ϕ × 2'-10)

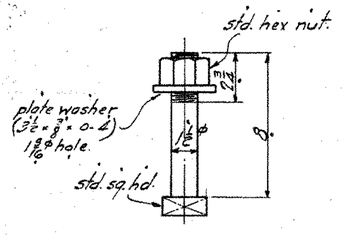


Sq. Hd. Bolt - SBI.
(1½" ϕ × 0-8)

All steel castings to be annealed
Shop Paint:- One coat of approved red lead and oil.
Machined surfaces coated with white lead and tallow.

**BETHLEHEM STEEL COMPANY**
Fabrication and Erection Dept. BETHLEHEM, PA.

DETAIL OF Pedestal, Rocker, Base & Pin etc.
STRUCTURE Railroad St. Bridge 38 over Lamoille River Johnson, Vt.
CUSTOMER Ring Construction Co.

SHOP PAINT
RIVETS OPEN HOLES UNLESS NOTED

| DRAWN BY | DATE | CHECKED BY | DATE | |
|---|---|---|---|---|
| EGL | 2-29-28 | [illegible] | 3/14/28 | [illegible] |

| REVISIONS | NO | DATE | BY | DESCRIPTION |
|---|---|---|---|---|
| | | | | |

PROJECT NAME: JOHNSON
PROJECT NUMBER: BHO 1448(18)
HIGHWAY NO.: TH 2
BRIDGE NO.: 6
OVER: THE LAMOILLE RIVER
FOR INFORMATIONAL PURPOSES ONLY
SHEET 67 OF 73

FILE F 7297 CONT. EE 2884 DWG. #1