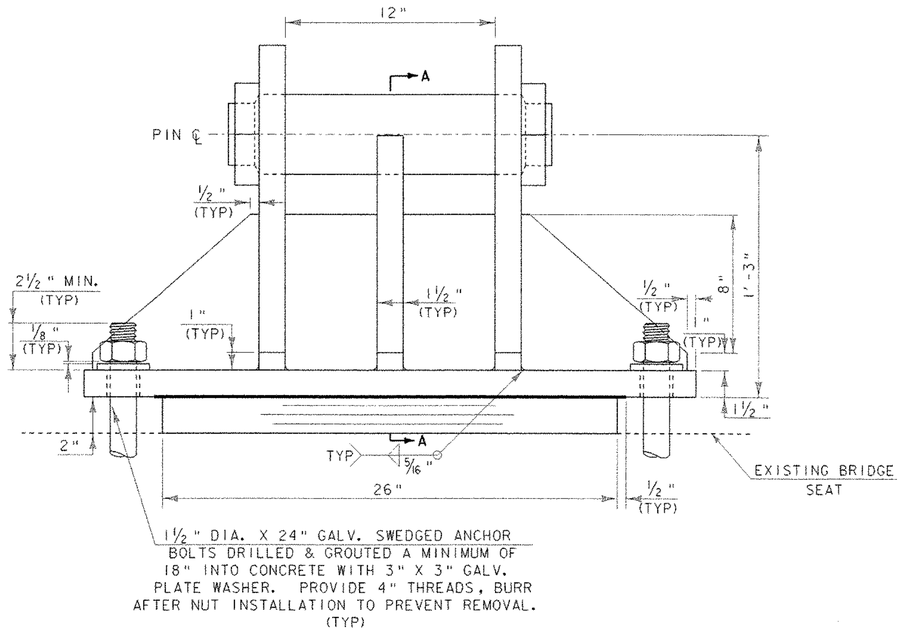

FRONT ELEVATION EXPANSION BEARING

SCALE: 3" = 1'-0"

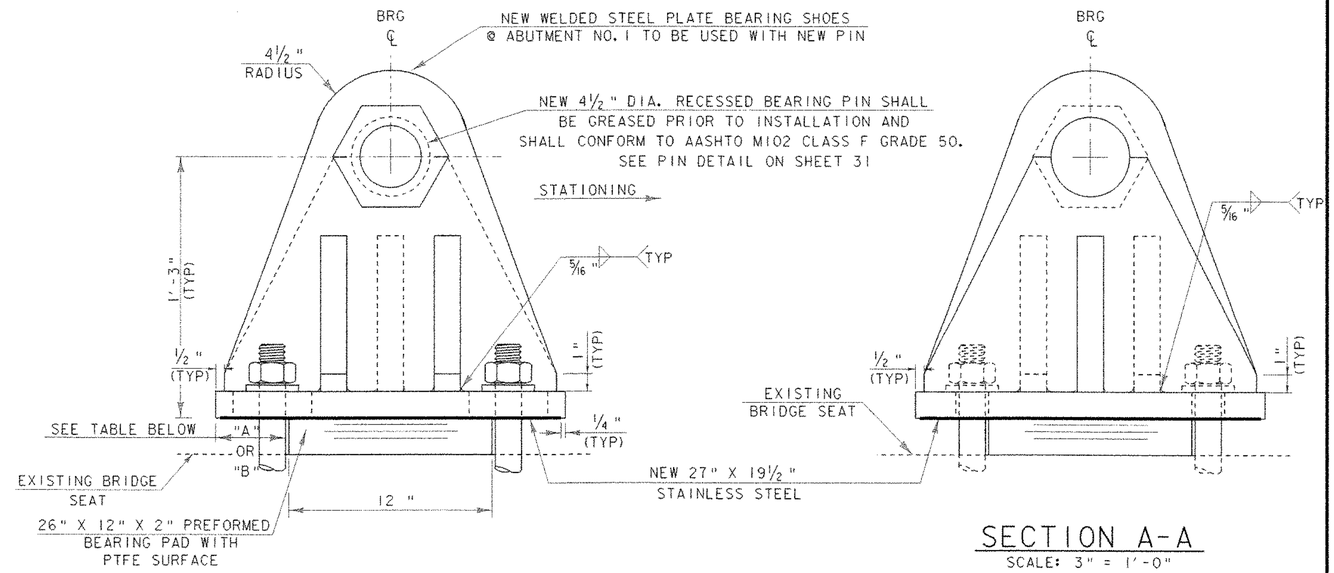

SIDE ELEVATION EXPANSION BEARING

SCALE: 3" = 1'-0"

SECTION A-A

SCALE: 3" = 1'-0"

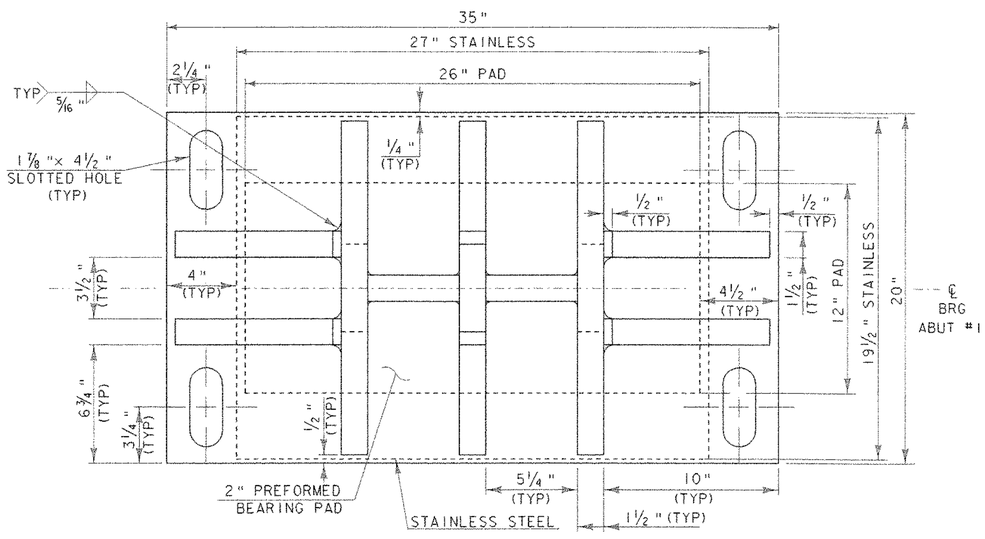

PLAN VIEW OF NEW BEARING SHOE

SCALE: 3" = 1'-0"

BEARING NOTES

1) BEARINGS SHALL CONFORM TO VAOT STANDARD SPECIFICATIONS FOR CONSTRUCTION SECTIONS 531 AND 731.

2) ALL COMPONENTS OF BEARINGS, EXCEPT PINS AND STAINLESS STEEL, SHALL BE AASHTO M-270 GRADE 50 STEEL.

3) ALL COMPONENTS OF BEARING DEVICES, EXCEPT PINS, PREFORMED PAD AND STAINLESS STEEL, SHALL BE METALIZED IN CONFORMANCE WITH VAOT STANDARD SPECIFICATIONS FOR CONSTRUCTION SECTIONS 531.04(b) AND 506.15. AREAS OF METALIZING DAMAGED BY FIELD WELDING OR HANDLING SHALL BE REPAIRED IN CONFORMANCE WITH SUPPLEMENTAL SPECIFICATION 513 WHICH REFERENCES ASTM A 760.

4) ALL ANCHOR BOLTS, NUTS, AND WASHERS SHALL BE GALVANIZED. ALL WASHERS SHALL BE 3/8" PLATE. PAYMENT FOR ANCHOR BOLTS, NUTS, AND WASHERS SHALL BE INCLUDED IN THE UNIT BID PRICE FOR ITEMS 531.10 "BEARING DEVICE ASSEMBLY (STEEL) (EXPANSION)" AND 531.10 "BEARING DEVICE ASSEMBLY (STEEL) (FIXED)".

5) "B" DISTANCE IS THE FINAL SETTING FOR THE BEARING PAD AFTER THE CONCRETE SLAB, CURB, AND PAVEMENT ARE PLACED. "A" DISTANCE IS LISTED FOR SETTING THE BEARING BEFORE THE CONCRETE DECK AND CURBS HAVE BEEN PLACED. THE FINAL DISTANCE, AS SHOWN IN THE TABLE, MUST BE ATTAINED WITHIN 1/16 OF AN INCH.

6) ANCHOR BOLTS SHALL HAVE A MINIMUM OF 18" EMBEDMENT INTO THE EXISTING CONCRETE AND SHALL CONFORM TO SUBSECTION 714.08 IN THE "VERMONT SPECIFICATIONS." THE ANCHOR BOLTS SHALL BE DRILLED AND GROUTED INTO THE ABUTMENT BRIDGE SEATS. THE DRILLING AND GROUTING OF THE ANCHOR BOLTS WILL BE INCIDENTAL TO THE ITEMS 531.10 "BEARING DEVICE ASSEMBLY (STEEL) (EXPANSION)" AND 531.10 "BEARING DEVICE ASSEMBLY (STEEL) (FIXED)".

7) JACKING AND SHORING WILL BE REQUIRED IN ORDER TO REPLACE THE EXISTING BEARINGS AT THE ABUTMENTS. DETAILS OF JACKING AND SHORING PROPOSALS SHALL BE SUBMITTED TO THE ENGINEER FOR INFORMATIONAL PURPOSES ONLY (TWO WEEKS PRIOR TO COMMENCEMENT OF THIS WORK). IN ADDITION, SUBSTANTIATING DESIGN CALCULATIONS PREFORMED BY A PROFESSIONAL ENGINEER SHALL BE SUBMITTED FOR INFORMATIONAL PURPOSES ONLY TO THE ENGINEER. THIS WORK SHALL BE PAID FOR UNDER THE ITEM 502.11 "SHORING SUPERSTRUCTURE BEARINGS."

BEARING NOTES CONTINUED ON SHEET 31

EXPANSION BEARING

TEMP	"A" DIST	"B"
0°F	3 7/8"	3 5/8"
15°F	4"	3 3/4"
30°F	4 1/8"	3 7/8"
45°F	4 1/4"	4"
60°F	4 3/8"	4 1/8"
75°F	4 1/2"	4 1/4"
90°F	4 5/8"	4 3/8"
105°F	4 3/4"	4 1/2"
120°F	4 7/8"	4 5/8"

SHEET NAME: BEARING DETAILS (EXPANSION) ABUT #1

PROJECT NAME: JOHNSON
PROJECT NUMBER: BHO 1448(18)

HIGHWAY NO.: TH 2
BRIDGE NO.: 6
OVER: THE LAMOILLE RIVER

FILE NAME: /stri/90j067/sj067sdw.dgn
PROJECT MANAGER: R. WHITCOMB
DESIGNED BY: C. MEUNIER
BRIDGE SHEET NUMBER:

PLOT DATE: 02-SEP-2005
DRAWN BY: T. HUSK
IPARM NAME: sc067bri.i
SHEET 30 OF 73