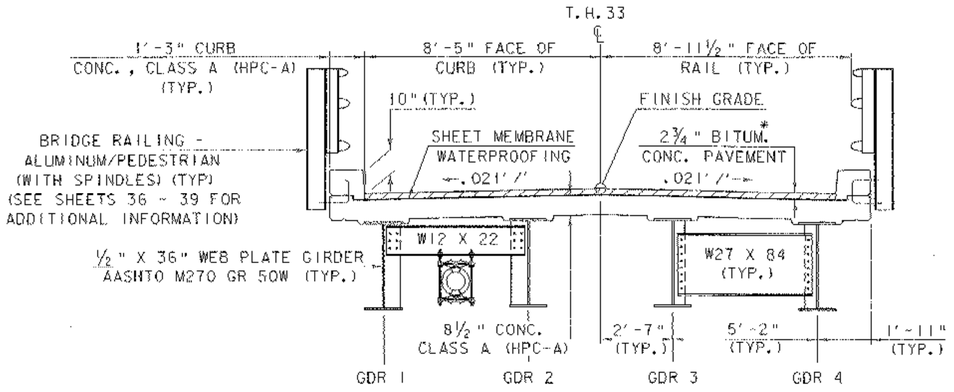

TYPICAL BRIDGE SECTION

SCALE: ⅜" = 1'-0"

* 1½" TYPE III OVER 1¼" TYPE IV

** 1½" TYPE III OVER 3" TYPE I

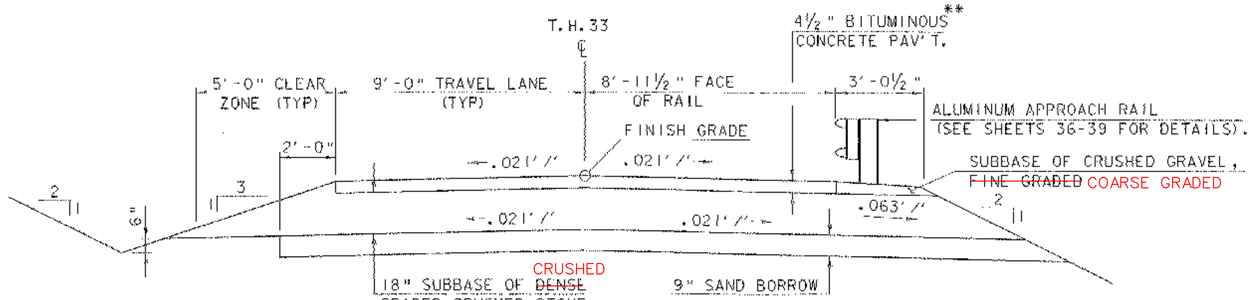

TYPICAL ROADWAY SECTION

SCALE: ⅜" = 1'-0"

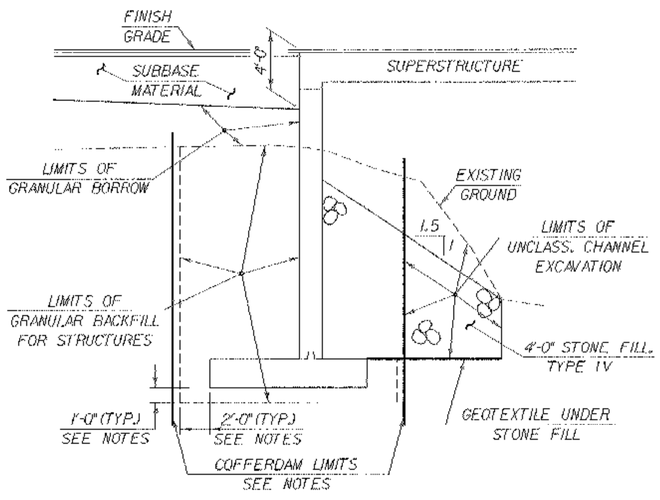

TYPICAL ABUTMENT SECTION

(NOT TO SCALE)

MATERIAL ITEM	TOLERANCE
PAVEMENT	±1/8" TOTAL THICKNESS
BASE COURSE	± ½"
SUBBASE	± 1"
SAND BORROW	± 1"
GRANULAR BORROW	± 1"

NOTES

1. COFFERDAM LIMITS TO BE DETERMINED BY THE CONTRACTOR.
2. THE PAY LIMITS OF "COFFERDAM EXCAVATION, EARTH" AND "COFFERDAM EXCAVATION, ROCK" SHALL BE 2'-0" OUTSIDE THE PERIMETER OF THE FOOTING, UP TO EXISTING GROUND OR BOTTOM OF SUBBASE, WHICHEVER IS LOWER.
3. ONE FOOT UNDERCUT AS DETERMINED NECESSARY BY THE RESIDENT ENGINEER.
4. IF A COFFERDAM IS CONSTRUCTED WHICH IS LARGER THAN THE INDICATED COFFERDAM EXCAVATION PAY LIMITS, PAYMENT FOR ALL UNCLASSIFIED CHANNEL EXCAVATION, INCLUDING THAT PORTION WHICH IS INSIDE THE COFFERDAM BUT OUTSIDE THE COFFERDAM EXCAVATION PAY LIMITS, WILL BE MADE AT THE CONTRACT UNIT PRICE FOR UNCLASSIFIED CHANNEL EXCAVATION.

FINAL HYDRAULICS REPORT

HYDROLOGIC DATA

DRAINAGE AREA: 46.0 sq. mi. (119.1 sq. km)
CHARACTER OF TERRAIN: Hilly to mountainous.
CHARACTER & TYPE OF STREAM: Straight, with a narrow flood plain.

NATURE OF STREAMBED: Gravel, cobbles, and boulders.

Q2.33= 1800 cfs (51 cms) Q50= 5000 cfs (142 cms)
Q10= 3300 cfs (93 cms) Q100= 6000 cfs (170 cms)
Q25= 4200 cfs (119 cms) Q500= 8200 cfs (232 cms)

DATE OF FLOOD OF RECORD: Nov. 1927
WATER SURFACE ELEV.: Unknown ESTIMATED DISCHARGE: Unknown
NATURAL STREAM VELOCITY @ Q25 = 12.6 fps (3.84 mps)
ICE CONDITIONS: Heavy DEBRIS: Moderate
DOES THE STREAM REACH MAXIMUM HIGHWATER ELEVATION RAPIDLY? Yes
IS ORDINARY RISE RAPID? Yes
IS STAGE AFFECTED BY UPSTREAM OR DOWNSTREAM CONDITIONS? No
IF YES, DESCRIBE:

WATERSHED STORAGE 1% HEADWATERS UNIFORM THROUGHOUT WATERSHED X IMMEDIATELY ABOVE SITE

EXISTING STRUCTURE

STRUCTURE TYPE: Steel beam with timber deck. YEAR BUILT: 1939
CLEAR SPAN (NORMAL TO STREAM): 89 ft. (27.1 m)
VERTICAL CLEARANCE ABOVE STREAMBED: 12 ft. (3.7 m)
WATERWAY OF FULL OPENING: 1070 sq. ft. (99 sq. m)
DISPOSITION OF STRUCTURE: Remove superstructure and south abutment.

TYPE OF MATERIAL UNDER SUBSTRUCTURE: Unknown

WATER SURFACE ELEV. @ Q2.33= 441.3* VELOCITY= 9.8 fps (2.99 mps)
Q10= 442.6* " 11.7 fps (3.57 mps)
Q25= 443.2* " 12.7 fps (3.87 mps)
Q50= 443.7* " 13.5 fps (4.11 mps)
Q100= 443.9* " 14.4 fps (4.39 mps)

LONG TERM STREAM BED CHANGES: None noted.

IS THE ROADWAY OVERTOPPED BELOW THE Q100? No FREQUENCY: N.A.
RELIEF ELEVATION: N.A. DISCHARGE OVER ROAD @ Q100: None

UPSTREAM STRUCTURE: TOWN: Middlebury DISTANCE: 1600 ft. (500 m)
HIGHWAY NO.: T.H. 23 STRUCTURE NO.: 21
STRUCTURE TYPE: Steel beam with concrete deck.
CLEAR SPAN: 42 ft. (12.8 m) CLEAR HEIGHT: 14 ft. (4.3 m)
YEAR BUILT: 1926 FULL WATERWAY: 580 sq. ft. (53.9 sq. m)

DOWNSTREAM STRUCTURE: TOWN: Middlebury DISTANCE: 6100 ft. (1860m)
HIGHWAY NO.: U.S. 7 STRUCTURE NO.: 125
STRUCTURE TYPE: Three span steel beam with concrete deck.
CLEAR SPAN: 185 ft. (56.4 m) CLEAR HEIGHT: 11 ft. (3.4 m)
YEAR BUILT: 1964 FULL WATERWAY: 2035 sq. ft. (189.1 sq. m)

PROPOSED STRUCTURE

STRUCTURE TYPE: Steel beam with concrete deck.

CLEAR SPAN (NORMAL TO STREAM): 90 ft. (27.4 m)
VERTICAL CLEARANCE ABOVE STREAMBED: 9 ft. (2.7 m)
WATERWAY OF FULL OPENING: 845 sq. ft. (78.5 sq. m)

WATER SURFACE ELEV. @ Q2.33= 442.8* VELOCITY= 9.8 fps (2.99 mps)
Q10= 444.3* " = 11.7 fps (3.57 mps)
Q25= 445.1* " = 12.6 fps (3.84 mps)
Q50= 445.8* " = 13.5 fps (4.11 mps)
Q100= 446.5* " = 14.6 fps (4.45 mps)

IS THE ROADWAY OVERTOPPED BELOW THE Q100? No FREQUENCY: N.A.
RELIEF ELEVATION: 448.5 DISCHARGE OVER ROAD @ Q100: None

AVERAGE LOW ELEVATION OF SUPERSTRUCTURE: 442.5
VERTICAL CLEARANCE @ Q100 = 1.0 ft. (0.3 m)

SCOUR: 2.0 ft. (0.6 m), total contraction + long term
REQUIRED CHANNEL PROTECTION: Stone fill, type IV

PERMIT INFORMATION

AVERAGE DAILY FLOW: 90 cfs (2.5 cms)
ORDINARY LOW WATER: 40 cfs (1.1 cms) DEPTH: 1 ft. (0.3 m)
ORDINARY HIGH WATER: 775 cfs (21.9 cms) DEPTH: 3 ft. (0.9 m)

TEMPORARY BRIDGE REQUIREMENTS

STRUCTURE TYPE: No temporary bridge required. Use existing bridge.

* The new bridge is 120 ft. (37 m) upstream of the existing bridge, thus water surface elevations are higher at the new bridge.

DESIGN CRITERIA:
1. DESIGN LIVE LOAD AASHTO HS-25-44
2. DESIGN SPAN 92' CTR. - CTR. BRG.
3. ALLOWABLE LOAD FOR SPREAD FOOTINGS ON SOIL A1=3.4 KSF & A2=6.3 KSF ON LEDGE NA
4. ALLOWABLE LOAD FOR PILING NA TYPE NA ESTIMATED LENGTH NA
5. STRUCTURAL STEEL AASHTO GRADE M270 GRADE 50W
6. REINFORCING STEEL GRADE 60
7. CONCRETE CLASS A (HPC-A) f'_c = 4000 PSI
   CONCRETE CLASS B (HPC-B) f'_c = 3500 PSI

TRAFFIC MAINTENANCE:
1. IS TRAFFIC TO BE MAINTAINED? YES IF YES, ON EXISTING STRUCTURE YES OR ON TEMPORARY BRIDGE NA
2. TEMPORARY BRIDGE REQUIREMENTS: ONE OR TWO WAY NA TRAFFIC CONTROL SIGNALS REQUIRED NA
   MINIMUM CLEAR SPAN (NORMAL TO STREAM) NA VERTICAL CLEARANCE ABOVE STREAMBED NA
   WATERWAY OF FULL OPENING NA
   ARE SIDEWALKS REQUIRED? NA IF SO, ON WHAT SIDE? NA
   STRUCTURE TYPE: NA

LOAD FACTOR LOAD RATING (TONS)

LOADING LEVELS (LOAD FACTOR)	TRUCK H	HS	3S2	6 AXLE	3A. STR.	4A. STR.	5A. SEMI
INVENTORY A=2.17; B=1.00	34	49					
POSTED A=1.55; B=1.40	47	68	78		63	64	72
OPERATING A=1.30; B=1.67		81	93	110	75	76	

STRENGTH RF: $\frac{\phi M_N - 1.3\,M_{DL}}{A \times M_{LL+I}}$ SERVICEABILITY RF: B $\frac{.95\,F_y S_{LL+I} - M_{DL}\frac{S_{LLNC}}{S_{DL}} - M_{SBL}\frac{S_{LLNC}}{S_{SBL}}}{1.67\,M_{LL+I}}$

TRAFFIC DATA

YEAR	ADT	DHV	% D	% T	ADTT
1998	80	10	--	<1	--
2018	100	15	--	<1	--

18 kip ESAL for flexible pavement from 1998 to 2018: <50000
18 kip ESAL for flexible pavement from 1938 to 2018: <50000
Design speed: 20 MPH

STATE OF VERMONT
AGENCY OF TRANSPORTATION

Town Of MIDDLEBURY Bridge No. 20
Highway No. T.H. 33 Log Sta.
Surv. Sta.

T.H. 33 OVER THE MIDDLEBURY RIVER
PRELIMINARY INFORMATION SHEET

Designed By R. WHITCOMB Drawn By G. ROY
Checked By T. SUMNER Date 7/99 Project Manager R.R. WHITCOMB Date 8/00

PROJECT MIDDLEBURY PROJECT NO. BRZ 1445 (19)

I.G.C. Info. 90\061\Structures\s\061pl.dgn s\061pl1

Bridge Sheet No. Sheet 2 of 55

PLOTTED 26-FEB-2002

STATE OF VERMONT
AGENCY OF TRANSPORTATION
RIGHT OF WAY PLANS
DETAIL SHEET

TABLE OF PROJECT PROPERTY ACQUISITION

PARCEL NO.	GRANTOR	SHEET NO.	BEGINNING STATION	ENDING STATION	TAKING	REM.	RIGHTS	TITLE TAKEN	DATE	TOWN OR CITY RECORDED	BK.	PG.	REMARKS
1	DEMPEWOLFF, PETER A. &	7	11+90.2 LT.	12+65.3 LT.	1159 S.F.±					MIDDLEBURY			
	MARY KAY		11+46 LT.	12+44 LT.			CONST. (T) 709 S.F.±						
			11+43 LT.	11+51 LT.			CULVERT (P)						
			11+60 LT.	12+23 LT.			SLOPE (T) 1500 S.F.±						
			11+68 LT.				DRIVE (T)						12' PAVED
			12+56 LT.	13+24 LT.			CONST. (T) 686 S.F.±						
			12+66 LT.	13+09 LT.			SLOPE (T) 1178 S.F.±						
			13+06 LT.	13+25 LT.			CHANNEL (P) 48 S.F.±						
2	CRAM, GARY F. & DEBORAH A.	7	13+72 LT.	14+12 LT.			CONST. (T) 108 S.F.±						
	SZELIGA, JOHN & CAROLYN												
3	~~KOLL, MARY E.~~; MURRAY, ALAN J.;	7	14+10 LT.	14+30 LT.			CONST. (T) 67 S.F.±						
	MURRAY, CARL E.; MURRAY, ERIC J.		14+29 LT.	14+49 LT.			CONST. (T) 42 S.F.±						
4	LAROCQUE, MARCEL J. & DIANE A.	7	14+18.9 RT.	15+33.8 RT.	0.15A±			WDOE	11-09-00	MIDDLEBURY	179	729	6707 S.F.±
			14+18 RT.	14+78 RT.			CONST. (T) 174 S.F.±						
5	BROWN NOVELTY CO., INC.	7	11+63.8 RT.	13+59.8 RT.	0.15A±			WDOE	03-20-01	MIDDLEBURY	181	241	6517 S.F.±
			10+46 RT.	10+53 RT.			CONST. (T) 48 S.F.±						
			10+25 RT.	13+60 RT.			RELOCATE (T)						BARN
			10+51 RT.	10+54 RT.			SLOPE (T) 6 S.F.±						
			10+54 RT.	10+57 RT.			INSTALL (T)						SILT FENCE
			10+77 RT.	10+81 RT.			INSTALL (T)						SILT FENCE
			11+80 RT.	13+59.8 RT.			CONST. (T) 873 S.F.±						
			11+82 RT.	12+18 RT.			SLOPE (T) 408 S.F.±						
			11+84 RT.	12+50 RT.			CULVERT (P)						
			12+00 RT.				DRIVE (T)						14' PAVED
			12+09 RT.	13+21 RT.			SLOPE (T) 4106 S.F.±						INCLUDES PART OF DETENTION BASIN
			12+23 RT.	13+18 RT.			DITCH (P)						
			12+36 RT.	12+55 RT.			ALL R.T. & I.						SHED
			12+36 RT.	12+55 RT.			REMOVE (T)						SHED
			12+69.4 LT.	13+21 LT.			SLOPE (T) 1200 S.F.±						
			12+86 LT.	13+21 LT.			DITCH (P)						
			13+01 LT.	13+36 LT.			CULVERT (P)						
			13+16 RT.	13+59.8 RT.			CHANNEL (P) 1638 S.F.±						INCLUDES PART OF DETENTION BASIN
			13+19 LT.	13+53.6 LT.			CHANNEL (P) 1379 S.F.±						
6	BOUTWELL, ONA L.,	7	10+45 CL.				DRIVE (T)			MIDDLEBURY			13'± PAVED
	TRUSTEE OF THE BOUTWELL REAL		10+81 LT.	11+39 LT.			SLOPE (P) 232 S.F.±						
	ESTATE TRUST		11+29 LT.	11+47 LT.			CONST. (T) 74 S.F.±						

REVISION NO.	SHEET	DESCRIPTION OF REVISION	DATE	MADE BY	APPROVED BY
1	7	PARCEL NO. 4 LAROCQUE. REMOVE 'GARAGE' TEXT FROM OUTLINE OF HOUSE. REMOVE BARN TOPO. PER C.O. 9079.	11-09-99	R.B.K.	L.W.B.
2	6	PARCEL NO. 5 BROWN NOVELTY COMPANY, INC. CHANGE CONST. (T) AT 10+20 RT. ~ 10+54 RT. TO 10+46 RT. ~ 10+53 RT.; 48 S.F.±. PER C.O. 9101.	03-01-00	M.J.R.	R.P.D.
3	1, 6, 7	PARCEL NO. 6 BOUTWELL. CHANGE STATION OF THE DRIVE (T) FROM 10+25 CL TO 10+45 CL; 13' PAVED. REMOVE CONST. (T) AT STA. 10+20 LT. ~ 11+47 LT. ADD CONST. (T), 11+29 LT. ~ 11+47 LT.; 74 S.F.± CHANGE SLOPE (T) AT STA. 10+25 LT. ~ 11+45 LT. TO SLOPE (P); 10+81 LT. ~ 11+39 LT.; 232 S.F.±. CHANGE 'BEGIN ROW PROJECT' TO STA. 10+45 6.5' LT. PER C.O. 9102.	03-01-00	M.J.R.	R.P.D.
4	6, 7	PARCEL NO. 5 BROWN NOVELTY CO., INC. CHANGE CULVERT (P) STATIONS ON DETAIL SHEET. REVISE CULVERT (P) TEXT ON LAYOUT. PER C.O. 9163.	09-27-00	S.L.D.	R.P.D.
5	6, 7	PARCEL NO. 6 BOUTWELL. CHANGE EXISTING 'BOUTWELL, ARCHIE E. & ONA L., TRUSTEES OF THE BOUTWELL REAL ESTATE TRUST', TO 'BOUTWELL, ONA L., TRUSTEE OF THE BOUTWELL REAL ESTATE TRUST' PER C.O. 9223.	03-13-02	G.J.F.	R.P.D.
5		PARCEL NO. 3 FORMERLY "KOLL" NOW, "SZELIGA"			
6		PARCEL NO. 6 ELIMINATE "ARCHIE E. BOUTWELL"			

RIGHT-OF-WAY
MAR 19 2002
PRELIMINARY PLANS
COMPLETED PLANS
FINAL PLANS

ACCT.CFunk
\\vaot_cadd\Filingcabinet$\9030G\Right0fWay\r1006d.dgn
DATE PLOTTED 13-MAR-2002

DR.(P)- DRAINAGE RIGHT
DIT.(P)- DITCHING RIGHT
CH.(P)- CHANNEL RT.
DRIVE (T)- DRIVE RIGHT
CUL.(P)- CULVERT RIGHT
[W]- WATER SOURCES

PRESENT R.O.W.
TAKING WITHOUT ACCESS
TAKING WITHOUT ACCESS ALONG PROPERTY LINE
TAKING WITH ACCESS
(P) PERMANENT EASEMENT
(T) TEMPORARY EASEMENT

LEGEND
C&T (P) CLEARING & TRIMMING
CZ (P) CLEAR ZONE
CONST.(T) CONSTRUCTION EASEMENT
SR SR SLOPE RIGHTS
PROPERTY LINE
TOP OF CUT
TOE OF SLOPE
UE (P) PERMANENT UTILITY EASEMENT

APPROVED: LAWRENCE W. BLISS DATE: 02-19-98
CHIEF, PLANS & TITLES

R. O. W. PLANS
MIDDLEBURY
BRZ 1445(19)
SHEET 6 OF 55

CONSTRUCT DRIVES
STA. 10+71 RT. (18' WIDE)
STA. 11+66 LT. (12' WIDE)
STA. 12+00 RT. (14' WIDE)
STA. 12+00 LT. (12' WIDE)
PAVE 5' WIDE APRON @ EACH DRIVE

DEMOLITION & DISPOSAL OF BLDG.
STA. 12+42 RT.

DURABLE 24" STOP BAR
STA. 15+33 RT.

TRAFFIC SIGNS TYPE A
STA. 15+31; 16' RT. (STOP SIGN)

NEW SIGN POST
FLANGED CHANNEL SIGN POST
STA. 15+31; 16' RT.

RELOCATE BARN
STA. 12+95

EVERGREEN TREES
24-6 FT WHITE CEDAR @ 4 FT SPACING, B&B, Thuja occidentalis (Nigra)
STA. 14+37.5; 33.4' RT. TO
STA. 15+29.4; 30.0' RT.

TRANSPLATING SHRUBS
STA. 11+74 LT. (LILAC)
STA. 11+78 LT. (LILAC)
STA. 12+41 LT. (LILY PATCH)

EXISTING BRIDGE DATA
WOOD PLANK DECK W/WOOD RUNNERS ON FOUR STEEL ROLLED BEAMS; CONCRETE ABUTMENTS & WINGWALLS

HEAVY DUTY STEEL BEAM GUARD RAIL
STA. 12+69 TO 13+41 LT.
STA. 12+90 TO 13+41 RT.
STA. 14+41 TO 14+66 LT.
STA. 14+41 TO 14+66 RT.

ANCHOR FOR STEEL BEAM RAIL
STA. 12+74 LT.
STA. 12+96 RT.
STA. 14+60 LT. & RT.

BRIDGE RAILING
STA. 13+41 TO 14+41 LT. & RT.

PORTLAND CEMENT CONC. SIDEWALK, 5"
STA. 15+31 LT. STA. 15+39 RT.

END R.O.W. PROJECT
BRZ 1445(19)
STA. 15+33.8 25' RT.

STA 15+46 RT
CHANGE ELEVATION OF EXISTING DROP INLET AND CAP WITH A NEW CAST IRON COVER WITH FRAME.

STA 15+46 RT - STA 15+48 RT -
NEW 18" X 22' CULVERT (SEE PIPE OPTIONS) WITH RCD WITH CAST IRON GRATE TYPE A AT INLET (SEE SHEET 18 FOR ADDITIONAL INFORMATION)

CURVE DATA NO. 1
Δ = 20°03' 11" LT
D = 20°
R = 286.48'
T = 50.65'
L = 100.27'
E = 4.44'
2T-L = 1.04'
BANKING = NORMAL

CURVE DATA NO. 2
Δ = 43°03' 32" RT
D = 20°
R = 286.48'
T = 113.02'
L = 215.29'
E = 21.49'
2T-L = 10.74'
BANKING = NORMAL

BEGIN R.O.W. PROJECT
BRZ 1445(19)
STA. 10+45 6.5' LT.

STA 11+49.7 LT-12+21.8 LT
NEW 18"X78' (SEE PIPE OPTIONS)
INLET EL. 446.45
OUTLET EL. 443.00

BM #1
CHIS. SQ. ON TOP OF CONCRETE RET. WALL
ELEV. 448.81

BM #2
CHIS. SQ. ON CONC. FOUNDATION
ELEV. 446.97

CRAM, GARY F. & DEBORAH A.
DEMPEWOLFF, PETER A. & MARY KAY
BOUTWELL, ONA L., TRUSTEE OF THE BOUTWELL REAL ESTATE TRUST
BROWN NOVELTY CO., INC.
SAWDUST COLLECTOR
SHED
SZELIGA, KOLL, MARY E.
MURRAY, ALAN J.
MURRAY, CARL E.
MURRAY, ERIC J.
LAROCQUE, MARCEL J. & DIANE A.
STATE OF VERMONT
APPROXIMATE AERIAL UTILITY RELOCATION ROUTE

PROPOSED PERM. BARN RELOCATION
TEMP. BARN RELOCATION
CONSTRUCTION LIMITS (TYP.)
EXISTING R.O.W.
EXISTING BR 20
EXISTING 4" W/L
EXISTING 4" W/L
EXISTING 3/4" W/L
EXISTING 18" CGMP (REMOVE)
REMOVE(T) GRADE AREA TO DRAIN INTO DI
INSTALL(T)
RELOCATE BARN(T)
STONE FILL, TYPE IV
STONE FILL, TYPE I
TOPSOILED AND SEEDED
GRAVEL DRIVE
CONCRETE RETAINING WALL
CONCRETE SIDEWALK
FLAG POLE
FIRE HDR.
SHRUB
PINE TREES
GARDEN
RASPBERRY PATCH
PORCH
SHED
TO MIDDLEBURY
TO RIPTON
SCHOOLHOUSE HILL RD. (PAVED)
MIDDLEBURY RIVER
VT 125 (PAVED)
STOP

DRIVE PI 51+43.8 BK= 51+43.77 AH
Δ = 8°55' 24" LT
R = 114.59'
T = 8.94'

CURVE NO. 2
PI 12+37.57 BK= 12+26.83 AH
12+65.3 80.5' LT.
12+36.5 74.8' LT.
37.2'

POC 12+00.00=
DRIVE POT 40+00
Δ = 90° RT
DRIVE POT 50+00
Δ = 90° LT

DRIVE PI 50+56.46 BK= 50+36.50 AH
Δ = 90°48' 48" RT
R = 45'
T = 45.64'
L = 71.5'

POC 11+66.28=
DRIVE POT 30+00
Δ = 101°09' 45" LT

PC 11+24.55
PT 11+19.89

END APPROACH BEGIN PROJECT 11+00.00

POC 10+70.87=
DRIVE POT 20+00
Δ = 101°17' 25" RT

BEGIN APPROACH 10+45.00

PC 10+19.62

DRIVE PI 40+31.57 BK= 40+30.98 AH
Δ = 26°32' 40" LT
R = 70'
T = 16.51'

CURVE NO. 1
PI 10+70.27 BK= 10+69.24 AH

11+90.2 35.2' LT.
11+63.8 25.0' RT.
3 STORY WF (OLD GRIST MILL)

12+69.4 25.0' LT.
R=311.48'
PT 13+39.85
L=76.8'

13+53.6 25.0' LT. BEGIN BRIDGE
13+42.25
F.C. = 452.03

℄ BRG. ABUT. NO. 2
14+36.50 (FIXED)
13+40.0 25.0' LT.

℄ BRG. ABUT. NO. 1
13+44.50 (EXPANSION)
13+59.8 25.0' RT.
POST 13+30.00 =
CHANNEL 4+00.00
Δ = 90° LT
13+40.0 25.0' RT.

14+24.0 27.4' LT.
14+18.9 29.1' RT.

END BRIDGE
14+38.50
F.C. = 452.01

15+19.7 46.5' LT.
POUR SECTIONS OF NEW SIDEWALK BACK TO FIRST UNDISTURBED SECTION OF EXISTING WALK, MATCH WIDTH
97.4'

END PROJECT
BEGIN APPROACH
15+00

END APPROACH
15+51.40
MATCH EXISTING EDGE OF VT 125

STA 14+35 15+25 RT
NEW 6" X 92' UNDERDRAIN
INLET EL. 444.30
OUTLET EL. 442.49

STA 11+84.0 RT
NEW 18"X58' CPEP (SL)
INLET EL. 441.08
OUTLET EL. 438.91

12+44.8 RT
12"X40' CPP (SL) W/ TYPE A GRATE & INLET
INLET EL. 440.31
OUTLET EL. 438.91

13+35.2 LT
12"X43.1' RCP (SL) W/ TYPE A GRATE & INLET

L=160.8'
R=261.48'

L=71.5'
R=45'

115.0'

2X2 DI

15+00 SPRUCES (REMOVE)

24" M (SAVE)
30" SP (SAVE)
12" M (SAVE)
12" OAK (SAVE)

20' WIDE R.O.W. (PRIVATE)
20' WIDE R.O.W. (PRIVATE) GRAVEL DRIVE

RIGHT-OF-WAY
MAR 1 1 2002
PRELIMINARY PLAT
COMPLETED PLAT
FINAL PLANS

PLOTTED 13 MAR 2002

STATE OF VERMONT
AGENCY OF TRANSPORTATION

Town Of MIDDLEBURY	Bridge No. 20
Highway No. T. H. 33	Log Sta.
	Surv. Sta.

T. H. 33 OVER THE MIDDLEBURY RIVER
SURVEY LAYOUT
Designed By R. WHITCOMB | Drawn By G. ROY

MIDDLEBURY
BRZ 1445(19)

R. O. W. SHEET 7 OF 55 SHEETS

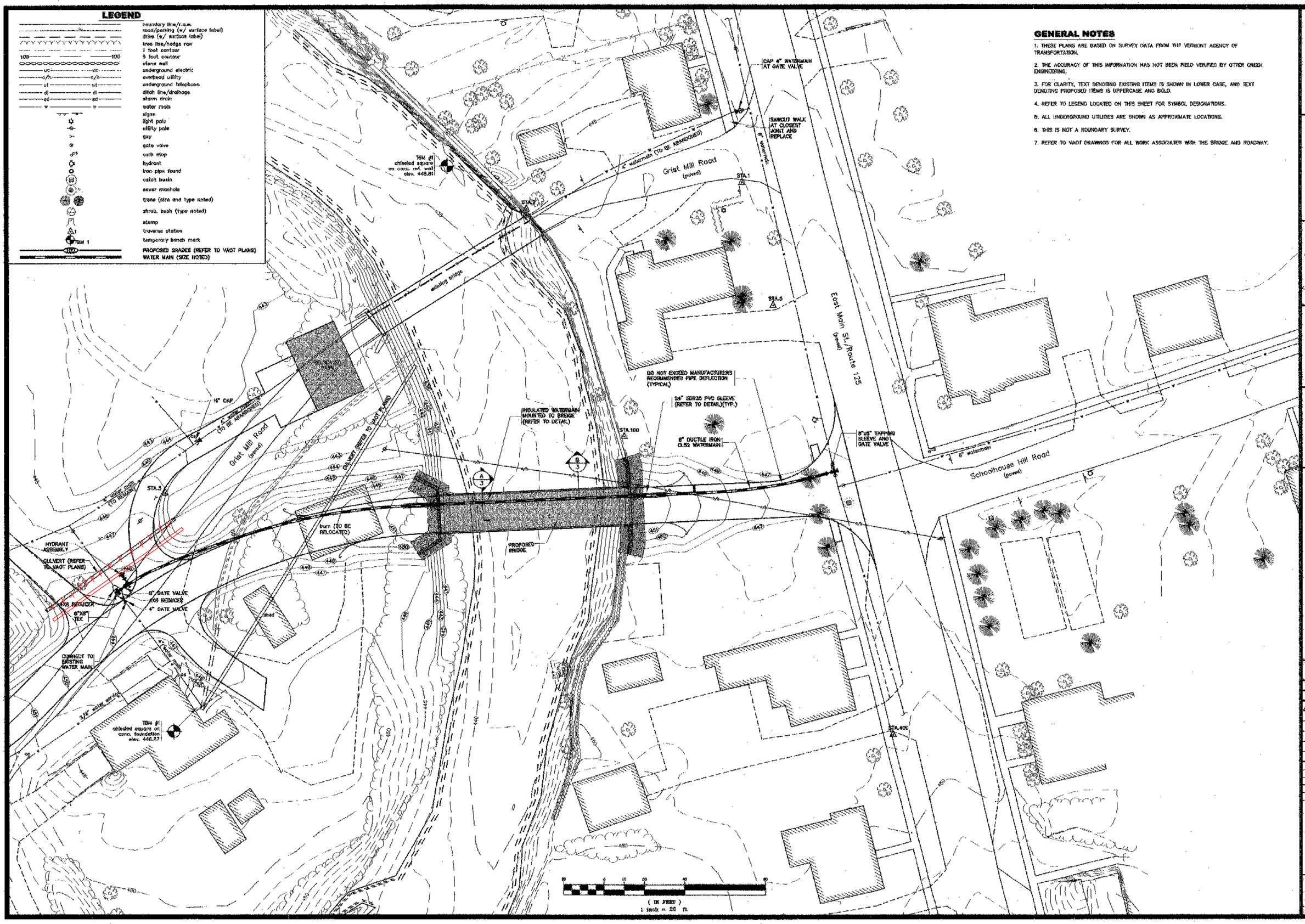

GENERAL NOTES

1. THESE PLANS ARE BASED ON SURVEY DATA FROM THE VERMONT AGENCY OF TRANSPORTATION.
2. THE ACCURACY OF THIS INFORMATION HAS NOT BEEN FIELD VERIFIED BY OTTER CREEK ENGINEERING.
3. FOR CLARITY, TEXT DENOTING EXISTING ITEMS IS SHOWN IN LOWER CASE, AND TEXT DENOTING PROPOSED ITEMS IS UPPERCASE AND BOLD.
4. REFER TO LEGEND LOCATED ON THIS SHEET FOR SYMBOL DESIGNATIONS.
5. ALL UNDERGROUND UTILITIES ARE SHOWN AS APPROXIMATE LOCATIONS.
6. THIS IS NOT A BOUNDARY SURVEY.
7. REFER TO VAOT DRAWINGS FOR ALL WORK ASSOCIATED WITH THE BRIDGE AND ROADWAY.

OTTER CREEK ENGINEERING, INC.
102 Court Street
P.O. Box 605
Middlebury, VT 05755
Telephone: 802.382-0522
Fax: 802.382-6640
E-mail: ottercrk@ottercrk.com

THESE DRAWINGS SHALL NOT BE ALTERED IN ANY WAY WITHOUT THE WRITTEN APPROVAL OF THE ENGINEER. ANY REVISIONS SHALL BE MADE BY THE ENGINEER AND NOTED IN THE REVISION BLOCK.
© 1999
OTTER CREEK ENGINEERING, INC.

STAMP AND SIGNATURE:

MAGNETIC NORTH

EAST MIDDLEBURY FIRE DISTRICT NO. 1 GRIST MILL BRIDGE MIDDLEBURY BRZ 1445(19) WATER MAIN REPLACEMENT

MIDDLEBURY, VERMONT

BID

DATE ISSUED: 11/30/99

REVISIONS:

1 REVISED PER AOT LETTER 03-29-01 JL

DRAWN BY: JL
CHECKED BY: PD
SCALE: 1"=20'
PROJECT NO.: 072-001
CADD FILE: 072-001

TITLE:

SITE PLAN

DRAWING NO.

1

SHEET: 18 OF 55

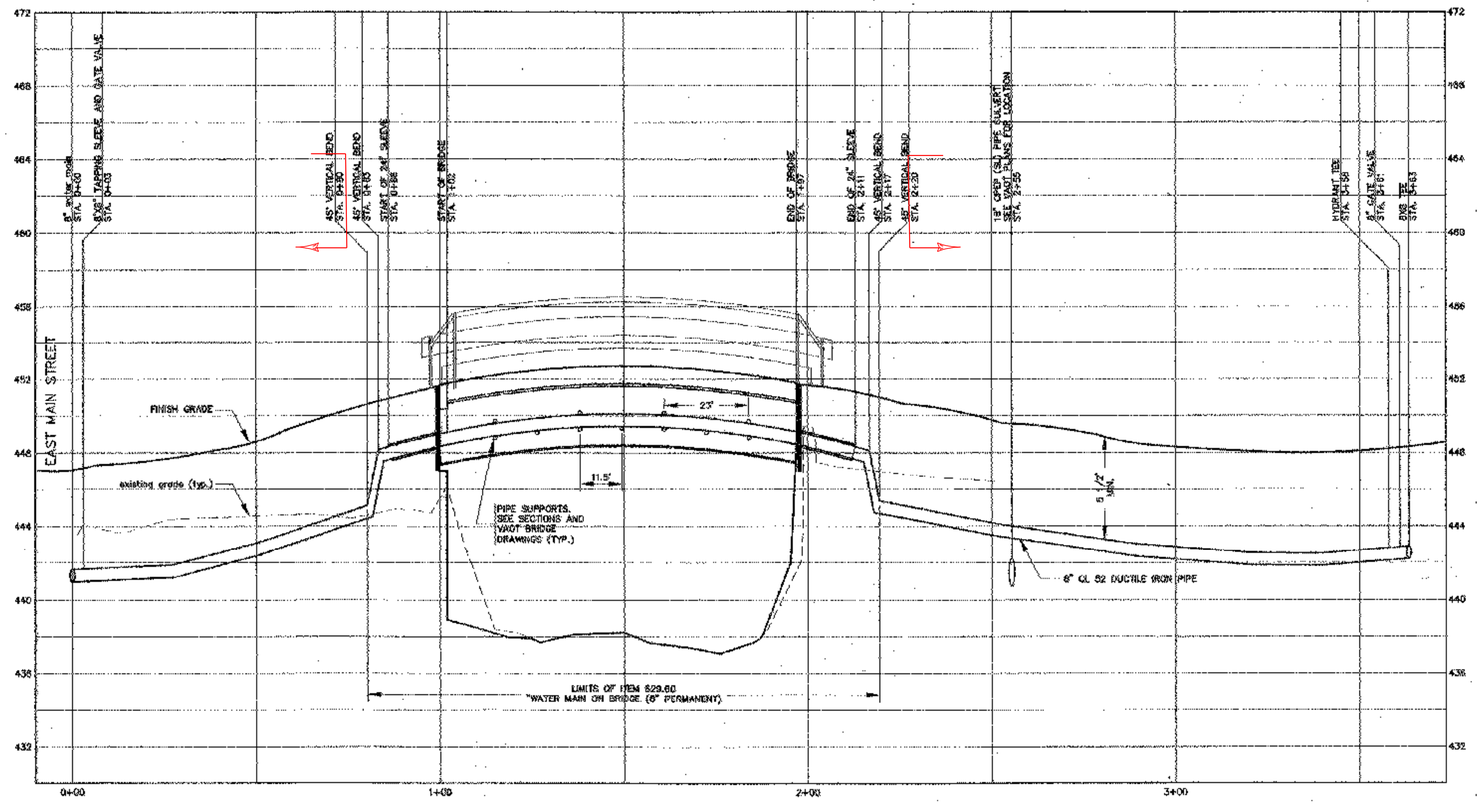

WATER MAIN PROFILE

SCALE: 1" = 20' HORIZONTAL,
1" = 4' VERTICAL

OTTER CREEK ENGINEERING, INC.
102 Court Street
P.O. Box 603
Middlebury, VT 05753
Telephone 802 382-8822
Fax 802 382-8840
E-mail ottercrk@ottercrk.com

THESE DRAWINGS SHALL NOT BE ALTERED IN ANY WAY WITHOUT THE WRITTEN APPROVAL OF THE ENGINEER. ANY REVISIONS SHALL BE MADE BY THE ENGINEER AND NOTED IN THE REVISION BLOCK.
© 1999
OTTER CREEK ENGINEERING, INC.

STAMP AND SIGNATURE:

STATE OF VERMONT
PAUL DESORBO
031
REGISTERED
PROFESSIONAL ENGINEER

EAST MIDDLEBURY FIRE DISTRICT NO. 1
GRIST MILL BRIDGE
MIDDLEBURY BRZ 1445(19)
WATER MAIN REPLACEMENT
MIDDLEBURY, VERMONT

BID

DATE ISSUED: 11/30/99

REVISIONS:
1 REVISED PER AOT LETTER 02-22-01 JL

DRAWN BY: JL
CHECKED BY: PD
SCALE: AS SHOWN
PROJECT NO.: 672-001
CADD FILE: 672-001

TITLE:
WATER MAIN PROFILE

DRAWING NO.
2

SHEET: 16 OF 55

PROJECT NOTES

GENERAL

1. ALL MATERIALS AND CONSTRUCTION SHALL CONFORM TO STATE OF VERMONT, AGENCY OF TRANSPORTATION STANDARD SPECIFICATIONS FOR CONSTRUCTION, DATED 1990, AND ITS LATEST REVISIONS, AND THE AASHTO STANDARD SPECIFICATIONS FOR HIGHWAY BRIDGES, DATED 1996, AND ITS LATEST REVISIONS.

2. IN STREAM CONSTRUCTION SHALL BE RESTRICTED TO THE PERIOD FROM JUNE 1 TO OCTOBER 1. ANY DEVIATION FROM THIS TIME PERIOD SHALL BE APPROVED IN WRITING BY THE AGENCY OF NATURAL RESOURCES.

3. FULL ACCESS TO ALL DRIVES WITHIN THE PROJECT LIMITS SHALL BE MAINTAINED AT ALL TIMES. THIS WORK SHALL BE SUBSIDIARY TO ITEM 635.10, "MOBILIZATION".

4. ALL ON-PROJECT SIGNS AND BARRICADES AS REQUIRED BY THE RESIDENT ENGINEER WILL BE THE RESPONSIBILITY OF THE CONTRACTOR AND SHALL BE SUBSIDIARY TO THE ITEM 635.10, "MOBILIZATION". ALL OFF-PROJECT SIGNING SHALL BE THE RESPONSIBILITY OF THE TOWN.

5. THE UNIT WEIGHT OF SOIL USED IN DESIGN WAS 140 PCF.

6. ALL DIMENSIONS ARE HORIZONTAL OR VERTICAL AND ARE GIVEN AT 68 DEGREES F.

EARTHWORK AND RELATED ITEMS

7. THE EXISTING STRUCTURAL STEEL ON THIS PROJECT WAS PAINTED WITH A MATERIAL WHICH MAY CONTAIN LEAD. THE REMOVED STRUCTURAL STEEL IS THE PROPERTY OF THE CONTRACTOR. THE CONTRACTOR SHALL INDEMNIFY AND HOLD THE STATE, ITS OFFICERS, AND EMPLOYEES HARMLESS CONCERNING THE CONTRACTOR'S USE OR DISPOSITION OF THE STRUCTURAL STEEL.

8. ITEM 529.20, "PARTIAL REMOVAL OF STRUCTURE" SHALL BE USED FOR REMOVAL OF THE EXISTING SUPERSTRUCTURE AND ANY PORTIONS OF THE SUBSTRUCTURE NOT REMOVED UNDER THE ITEM 203.27, "UNCLASSIFIED CHANNEL EXCAVATION". EXISTING ABUTMENT ONE WILL BE REMOVED DOWN TO BOTTOM OF NEW STONE FILL, TYPE IV. EXISTING ABUTMENT TWO WILL BE REMOVED DOWN TO AN ELEVATION THAT MATCHES THE TOP OF THE EXISTING ADJACENT RETAINING WALLS.

9. RELOCATION OF THE EXISTING BARN AT STA. 12+95 TO BOTH ITS TEMPORARY AND PERMANENT LOCATION SHALL BE PAID FOR UNDER ITEM 529.15, "REMOVAL OF STRUCTURE (MOD.)".

10. THE CONTRACTOR SHALL NOTIFY THE RESIDENT ENGINEER TWO WEEKS PRIOR TO COMMENCING WORK ON THE WATERLINE RELOCATION.

11. ANY TEMPORARY CONSTRUCTION FILL WITHIN THE WATER COURSE SHALL CONSIST OF CLEAN STONE FILL ONLY, NO OTHER FILLING IN THE STREAM SHALL OCCUR WITHOUT THE APPROVAL OF THE STREAM ALTERATION ENGINEER.

12. THE STONE FILL, TYPE IV UNDER THE BRIDGE SHALL BE PLACED BEFORE THE BEAMS ARE SET.

13. TACK COAT: EMULSIFIED ASPHALT IS TO BE APPLIED AT A RATE OF 0.015 GAL/SY BETWEEN SUCCESSIVE COURSES OF PAVEMENT OR AS DIRECTED BY THE ENGINEER.

14. THE HEIGHT OF FILL BEHIND ABUTMENTS WILL BE LIMITED TO THE BRIDGE SEAT ELEVATION UNTIL THE DECK HAS BEEN POURED AND THE CURING PERIOD IS UP.

CONCRETE AND REINFORCING STEEL

15. THE DECK AND CURB CONCRETE SHALL BE CONCRETE, CLASS A (HPC-A). ALL OTHER CONCRETE SHALL BE CONCRETE, CLASS B (HPC-B) UNLESS NOTED OTHERWISE.

16. SURFACES OF BRIDGE SEATS UNDER THE BEARING DEVICES SHALL BE LEVEL. OTHER AREAS OF THE BRIDGE SEAT SHALL BE SLOPED 1/4 INCH PER FOOT. THE ABUTMENT SEATS SHALL BE SLOPED FULL WIDTH TOWARD MIDSPAN. THE ENTIRE BRIDGE SEAT SURFACE SHALL BE GIVEN A STEEL TROWEL OR MAGNESIUM FLOAT FINISH.

17. CONCRETE PORTIONS OF THE ABUTMENT AND WINGWALLS ABOVE THE ADJACENT BRIDGE SEAT ELEVATIONS SHALL NOT BE PLACED UNTIL THE FINISH GRADE HAS BEEN DETERMINED BY THE RESIDENT ENGINEER.

18. THE DECK IS TO BE PLACED IN ONE CONTINUOUS PLACEMENT WITH A MAXIMUM DURATION OF EIGHT HOURS. IF CIRCUMSTANCES PREVENT THIS FROM BEING ACCOMPLISHED, A CONSTRUCTION JOINT SHALL BE USED. A 96-HOUR DELAY BETWEEN THE COMPLETION OF ONE DAY'S PLACEMENT AND THE BEGINNING OF ANOTHER PLACEMENT SHALL BE OBSERVED.

19. WHEN POURING THE DECK, THE CONCRETE SHALL BE DEPOSITED PARALLEL TO THE CENTERLINE OF BEARING SO AS TO LOAD THE GIRDERS EQUALLY.

20. NO TRAFFIC SHALL BE ALLOWED ON THE NEW DECK UNTIL THE CURE PERIOD IS UP AND THE 28-DAY DESIGN STRENGTH IS ATTAINED, AS EVIDENCED BY TEST CYLINDERS CURED UNDER FIELD CONDITIONS.

21. THE KEY-IN CONCRETE CONSTRUCTION JOINTS SHALL BE MONOLITHIC AND CONTINUOUS FOR THE FULL LENGTH OF THE JOINT. UPWARD KEYS SHALL BE PLACED INTEGRALLY WITH THE CONCRETE BELOW THE JOINT.

22. JOINTS AND SCORE MARKS IN THE CONCRETE SHALL BE CONSTRUCTED AS INDICATED ON THE PLANS OR AS DIRECTED BY THE ENGINEER.

23. ALL EXPOSED EDGES OF CONCRETE SHALL BE CHAMFERED 1 INCH X 1 INCH.

24. WATER REPELLENT SHALL BE APPLIED TO ALL EXPOSED CONCRETE SURFACES EXCEPT THE UNDERSIDE OF THE DECK BETWEEN THE DRIP NOTCHES.

25. THE MINIMUM COVER FOR REINFORCING STEEL IN THE SUBSTRUCTURES SHALL BE TWO INCHES ALONG WALL FACES AGAINST EARTH, AND THREE INCHES ELSEWHERE UNLESS DETAILED OTHERWISE.

26. ALL REINFORCING STEEL IN THE CONCRETE DECK AND BRIDGE CURBS SHALL BE EPOXY COATED AND PAID FOR UNDER THE ITEM 507.17, "EPOXY COATED REINFORCING STEEL". WHEN EPOXY COATED REINFORCING STEEL IS CUT, THE UNCOATED ENDS SHALL BE REPAIRED WITH MATERIALS AND PROCEDURES APPROVED BY THE COATING MANUFACTURER. FLAME CUTTING OF EPOXY COATED REINFORCING STEEL WILL NOT BE PERMITTED.

27. REINFORCING STEEL PLACEMENT TOLERANCES SHALL BE AS FOLLOWS:

    SPACING: +/- 1 INCH
    CLEARANCE: +/- 1/4 INCH

STRUCTURAL STEEL

28. ALL STRUCTURAL STEEL PAID UNDER THE ITEM 506.55, "STRUCTURAL STEEL (PLATE GIRDER)" SHALL CONFORM TO AASHTO M270 GR.50W UNLESS NOTED OTHERWISE ON THE PLANS.

29. THE CHARPY V-NOTCH TEST IS REQUIRED ONLY FOR THOSE MEMBERS DESIGNATED AS SUCH ON THE PLANS AS SPECIFIED IN SUBSECTION 714.01 OF THE STANDARD SPECIFICATIONS FOR CONSTRUCTION.

30. AFTER THE SUPERSTRUCTURE STEEL HAS BEEN SET ON THE BEARINGS, ELEVATIONS SHALL BE TAKEN ALONG THE TOP OF EACH GIRDER UNDER THE DIRECTION OF THE RESIDENT ENGINEER. THESE ELEVATIONS SHALL BE USED IN DETERMINING THE FINAL GRADE.

31. ALL FIELD CONNECTIONS SHALL BE MADE USING 7/8 INCH DIAMETER BOLTS CONFORMING TO AASHTO M 164 TYPE 3. HOLES SHALL BE 15/16 INCH DIAMETER, UNLESS OTHERWISE NOTED.

32. FLEMING BRACKETS OR SIMILAR FALSEWORK SHALL BE DESIGNED BY THE CONTRACTOR AND SHALL BE LIMITED TO A MAXIMUM SPACING OF 4 FEET.

33. ANY HOLES IN THE FASCIA BEAMS NOT OTHERWISE FILLED SHALL BE FITTED WITH BUTTON HEAD OR HEX HEAD BOLTS CONFORMING TO AASHTO M164 TYPE 3. THESE BOLTS SHALL BE TIGHTENED IN ACCORDANCE WITH SUBSECTION 506.19 OF THE STANDARD SPECIFICATIONS FOR CONSTRUCTION.

MISCELLANEOUS

34. AS SHOWN IN THE LAYOUT SHEET, THE EXISTING LILACS AND BOULDERS FROM STA. 11+74 LT. - STA. 11+78 LT. AND EXISTING LILY PATCH AT STA. 12+41 LT. SHALL BE REMOVED AND RESET TO THE SATISFACTION OF THE RESIDENT ENGINEER AND PROPERTY OWNER. THIS WORK SHALL BE PAID FOR UNDER ITEM 565.50, "TRANSPLANTING SHRUBS".

35. THE CONTRACTOR SHALL TAKE CARE NOT TO UNDERMINE EXISTING CONCRETE RETAINING WALL WHEN EXCAVATING FOR WINGWALL NO.3. ANY DAMAGE TO THE RETAINING WALL WILL BE REPAIRED BY THE CONTRACTOR AT THE CONTRACTOR'S EXPENSE.

36. THE REQUIRED CHANGE IN ELEVATIONS FOR THE EXISTING DROP INLET AT STA. 15+46 RT AND THE ELEVATIONS FOR THE THE NEW DROP INLET AT STA. 15+48 RT WILL BE DETERMINED IN THE FIELD BY THE ENGINEER. THE OUTLET INVERT OF THE NEW ~~8"~~ 8 INCH, 22 FOOT LONG PIPE WILL BE 3 INCHES HIGHER THAN THE EXISTING PIPE THAT IS LEAVING THE EXISTING DROP INLET AT STA. 15+46 RT. THE COST OF A NEW PIPE OPENING FOR THE EXISTING DROP INLET AT STA. 15+46 RT WILL BE SUBSIDIARY TO TRENCH EXCAVATION.

37. THE STAINLESS STEEL COMPONENTS OF THE WATER MAIN PIPE HANGERS WILL CONFORM TO ASTM F593 WITH 120 KSI MINIMUM TENSILE STRENGTH FOR THE RODS, ASTM F594 ALLOY GROUP 1,2,3 FOR THE NUTS AND ASTM A276 TYPE 304 FOR THE WASHERS.

STATE OF VERMONT
AGENCY OF TRANSPORTATION

Town Of MIDDLEBURY	Bridge No. 20
Highway No. T.H. 33	Log Sta.
	Surv. Sta.

T.H. 33 OVER THE MIDDLEBURY RIVER

PROJECT NOTES

Designed By T. SUMNER	Drawn By K. CHISHOLM
Checked By T. SUMNER Date 7/00	Project Manager R.R. WHITCOMB Date 8/00
PROJECT MIDDLEBURY	PROJECT NO. BRZ 1445 (19)
I.G.C. Info. 90\06\Structures\s1061pn.dgn	s1061pn1
Bridge Sheet No.	Sheet 18 of 55

PLOTTED 26-FEB-2002

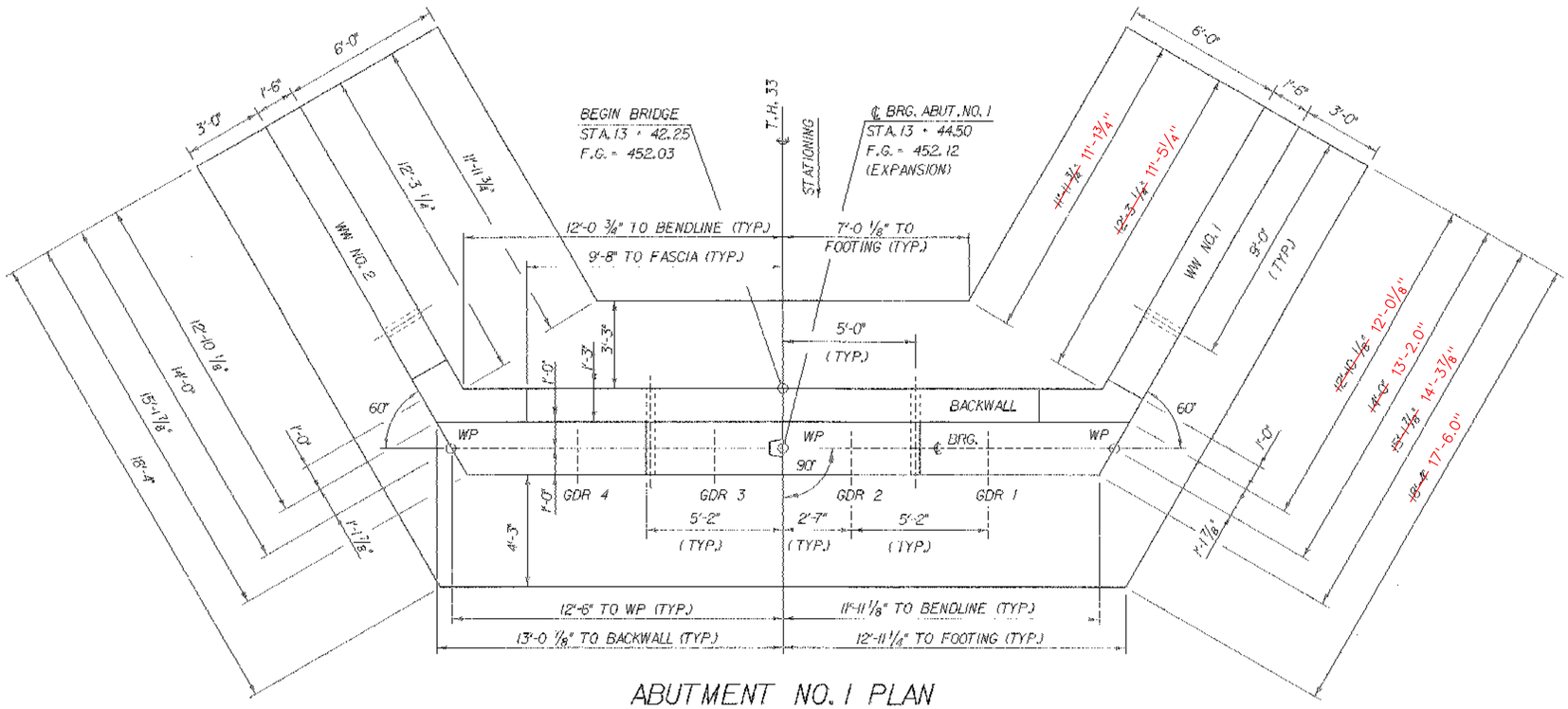

ABUTMENT NO. 1 PLAN

SCALE: 3/8" = 1'-0"

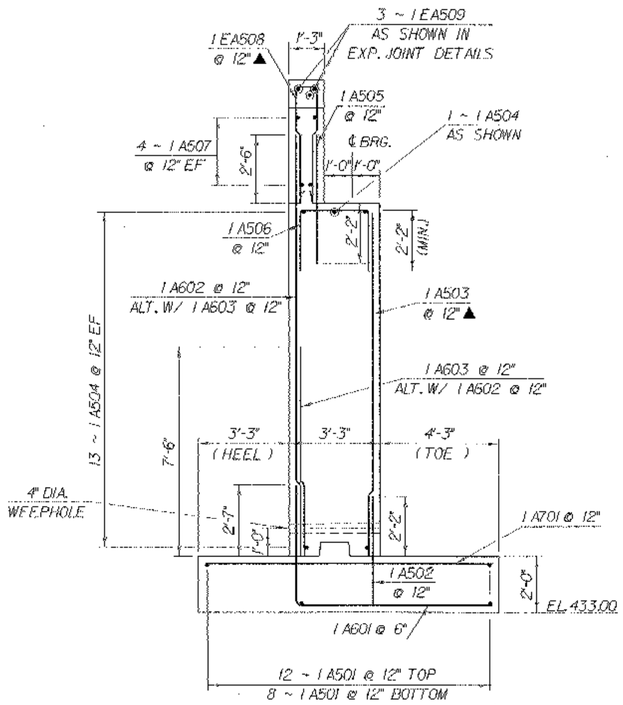

ABUTMENT NO. 1

SCALE: 3/8" = 1'-0"

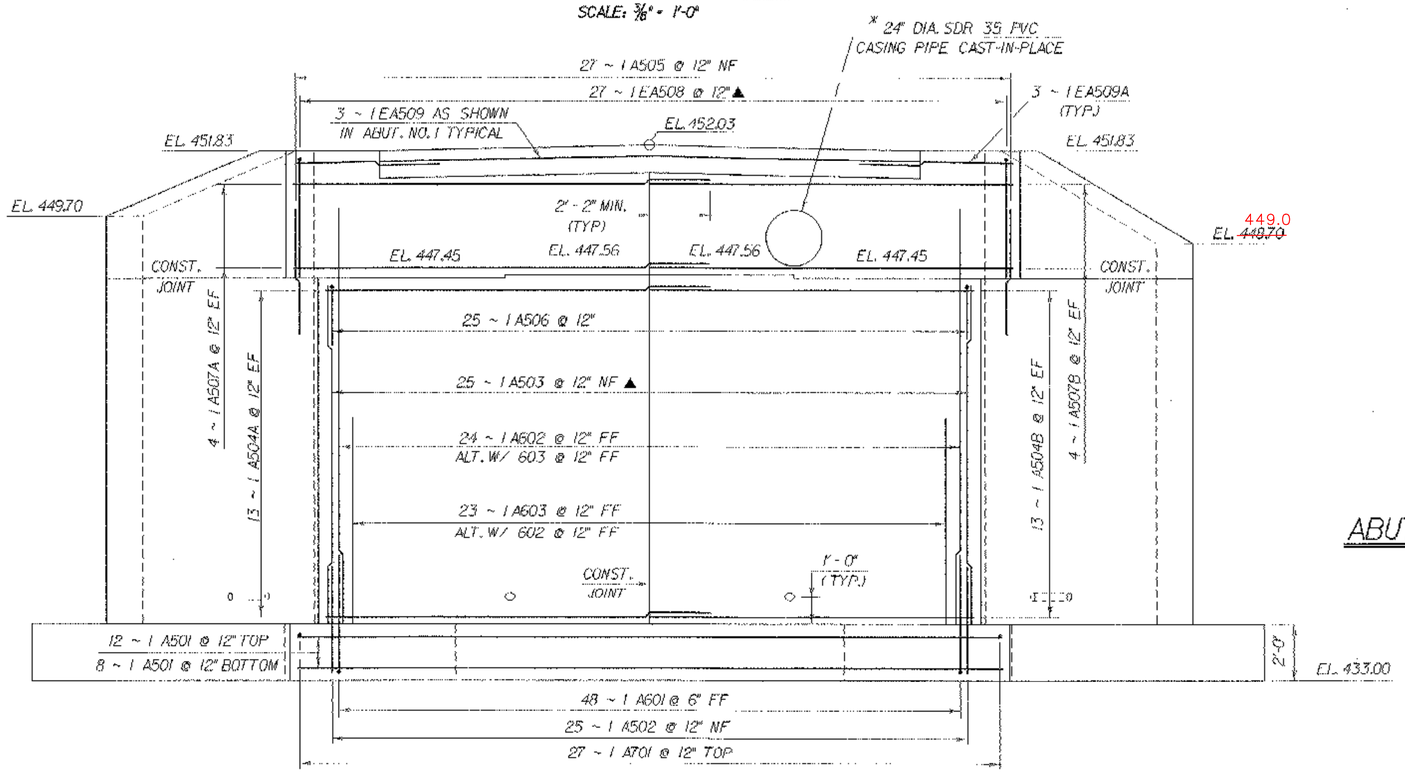

ABUTMENT NO. 1 ELEVATION

SCALE: 3/8" = 1'-0"

NOTE:

NF = NEAR FACE
FF = FAR FACE
EF = EACH FACE
▲ = CUT TO FIT IN FIELD
3" CLR. UNLESS OTHERWISE SPECIFIED ON THE PLANS.

* 1. EXACT LOCATION OF 24" DIA. SDR 35 PVC CASING PIPE TO BE DETERMINED IN THE FIELD BY THE RESIDENT ENGINEER AND THE CONTRACTOR. (SEE WATERLINE DETAILS.)

2. THE CASING PIPE SHALL BE PAID FOR UNDER ITEM 629.60, "WATER MAIN ON BRIDGE".

STATE OF VERMONT
AGENCY OF TRANSPORTATION

Town Of MIDDLEBURY	Bridge No. 20
Highway No. T.H. 33	Lay. Sta. / Surv. Sta.

T.H. 33 OVER THE MIDDLEBURY RIVER

ABUTMENT NO. 1 DETAILS

Designed By R. WHITCOMB	Drawn By K. CHISHOLM
Checked By T. SUMNER Date 7/00	Project Manager R.R. WHITCOMB Date 8/00
PROJECT MIDDLEBURY	PROJECT NO. BRZ 1445 (19)
I.G.C. Info. 90106\Structures\s106abut.dgn	s106abu1
Bridge Sheet No.	Sheet 29 of 55

PLOTTED 26-FEB-2002

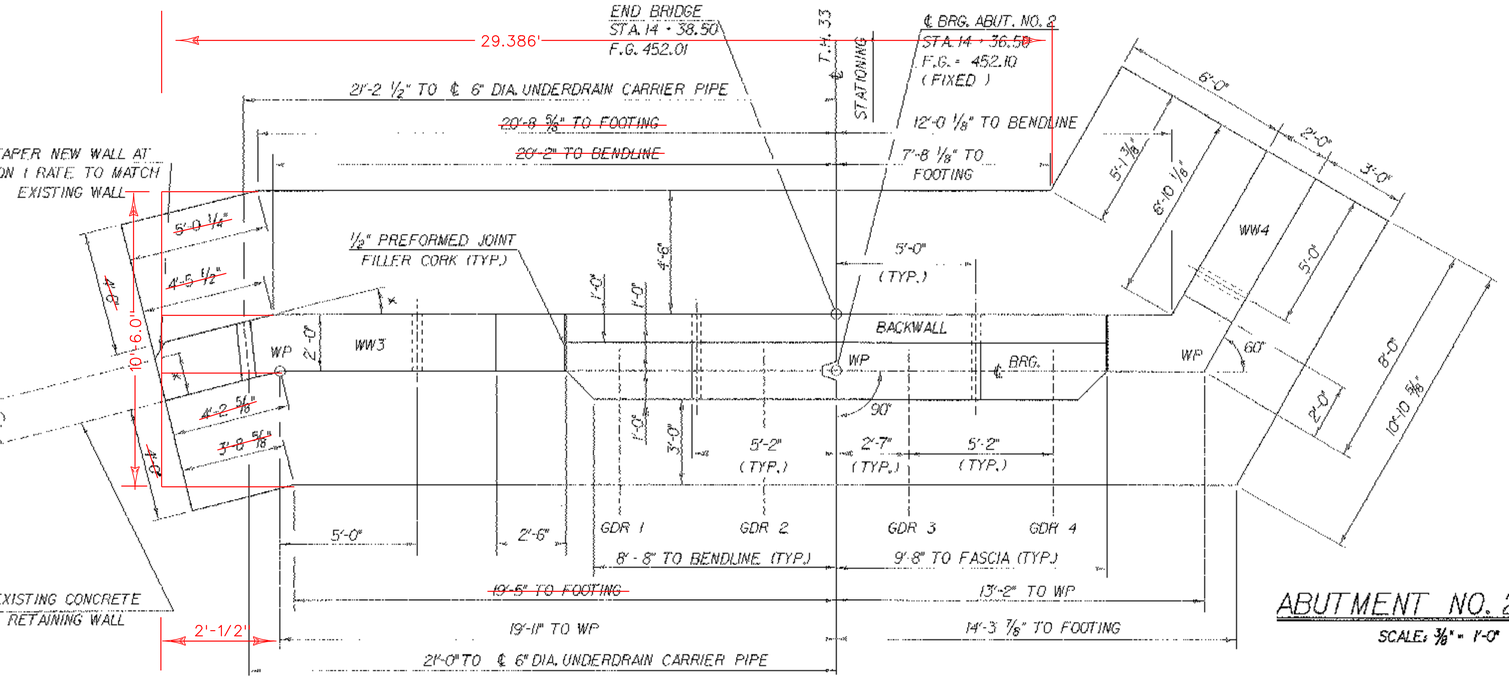

ABUTMENT NO. 2 PLAN

SCALE: 3/8" = 1'-0"

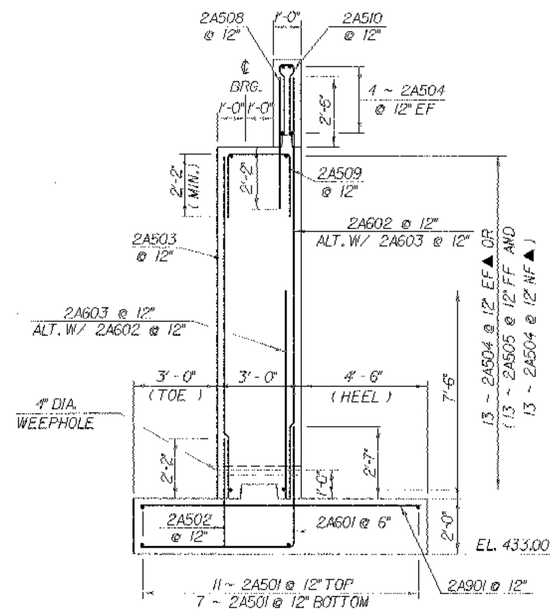

ABUTMENT NO. 2

SCALE: 3/8" = 1'-0"

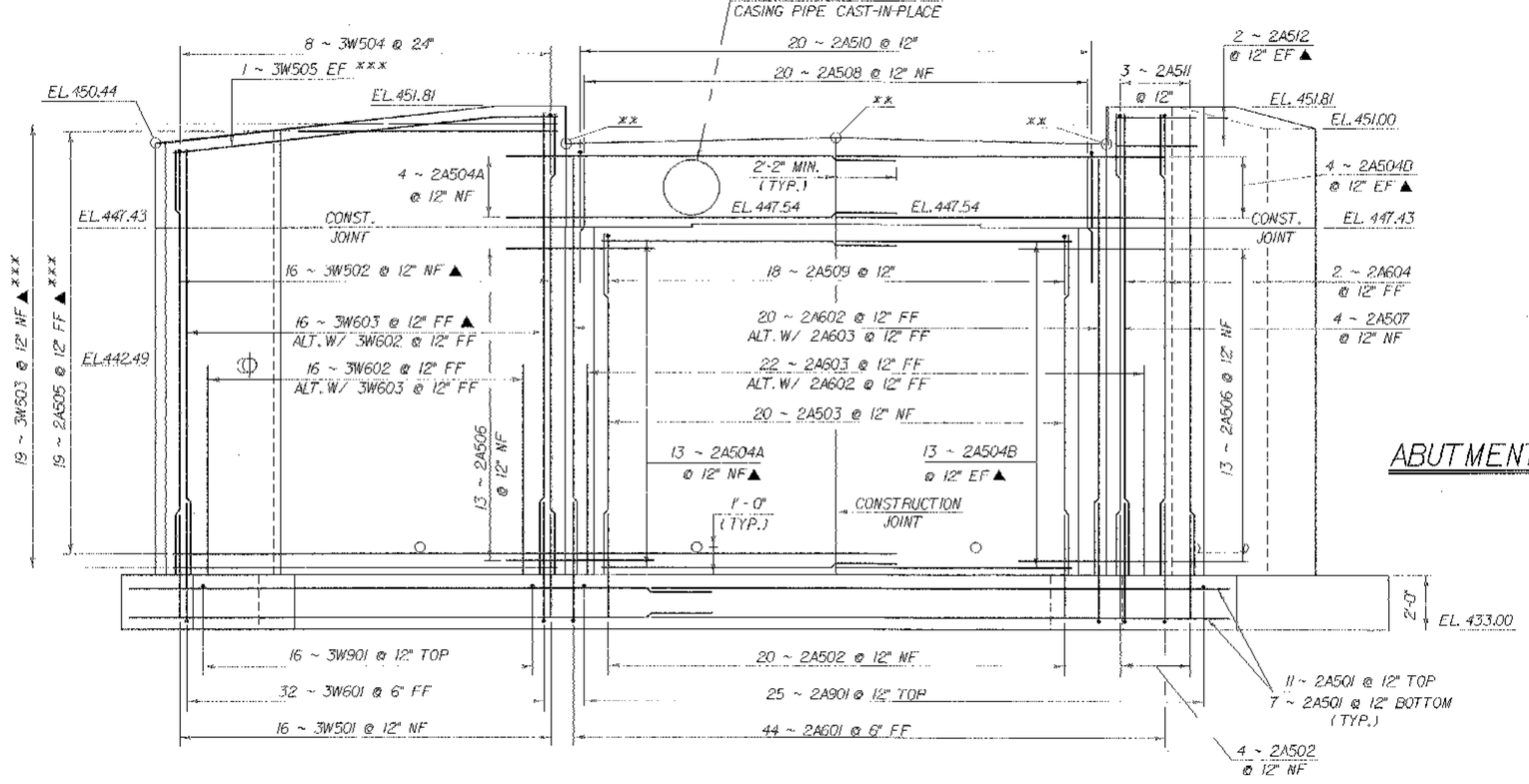

ABUTMENT NO. 2 & WINGWALL NO. 3 ELEVATION

SCALE: 3/8" = 1'-0"

* TAPER AND BEND WINGWALL NO. 3 TO MATCH END OF EXISTING CONCRETE RETAINING WALL.

** THESE ELEVATIONS ARE TO BE DETERMINED AFTER STRUCTURAL STEEL IS ERECTED.

*** BARS SHALL BE BENT TO FIT IN FIELD.

NOTE:

NF = NEAR FACE
FF = FAR FACE
EF = EACH FACE
▲ = CUT TO FIT IN FIELD
3" CLR. UNLESS OTHERWISE SPECIFIED ON THE PLANS.

STATE OF VERMONT
AGENCY OF TRANSPORTATION

Town Of MIDDLEBURY	Bridge No. 20
Highway No. T.H. 33	Log Sta. / Surv. Sta.

T.H. 33 OVER THE MIDDLEBURY RIVER

ABUTMENT NO. 2 DETAILS

Designed By R. WHITCOMB	Drawn By K. CHISHOLM
Checked By T. SUMNER Date 7/00	Project Manager R.R. WHITCOMB Date 8/00
PROJECT MIDDLEBURY	PROJECT NO. BRZ 1445 (19)
I.G.C. Info. 90\06A\Structures\s1061ab2g	s1061ab2i
Bridge Sheet No.	Sheet 30 of 55

PLOTTED 26 FEB 2002

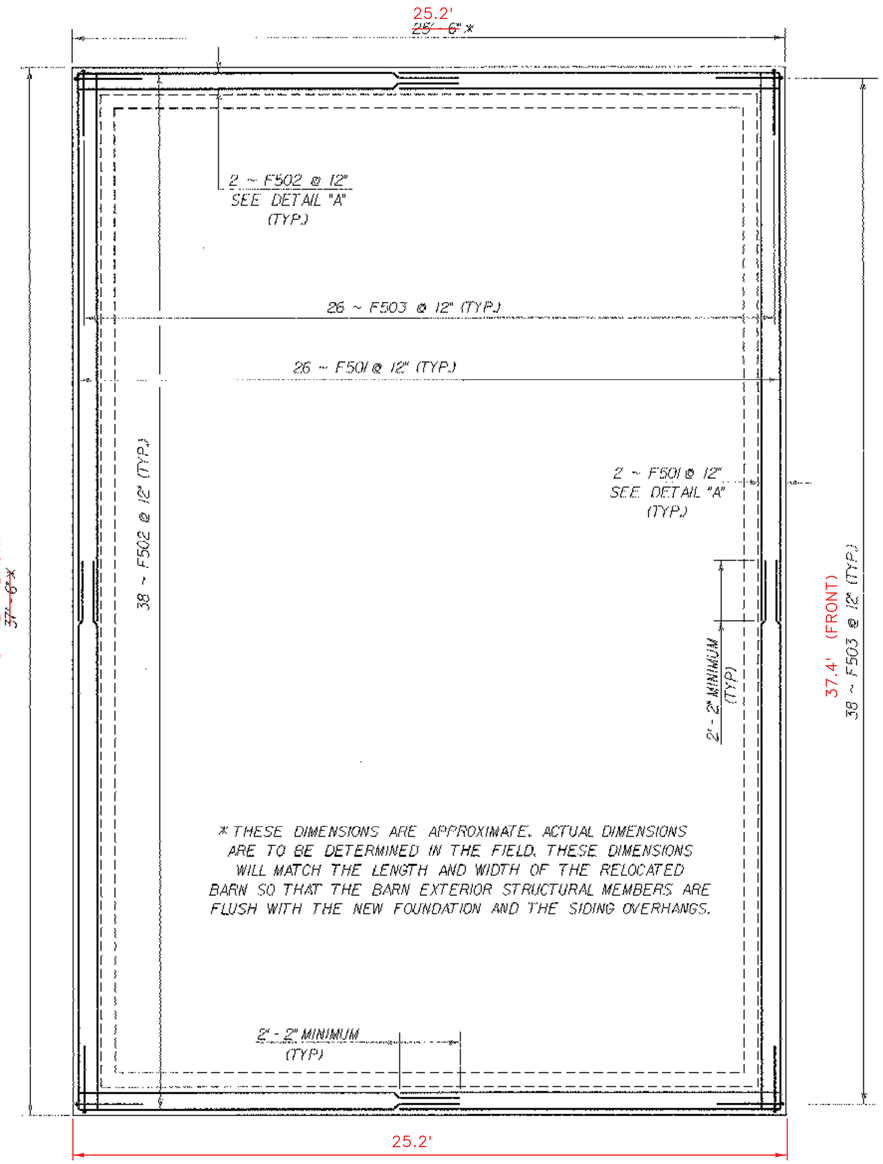

SLAB FOUNDATION PLAN

SCALE: 3/8" = 1'-0"

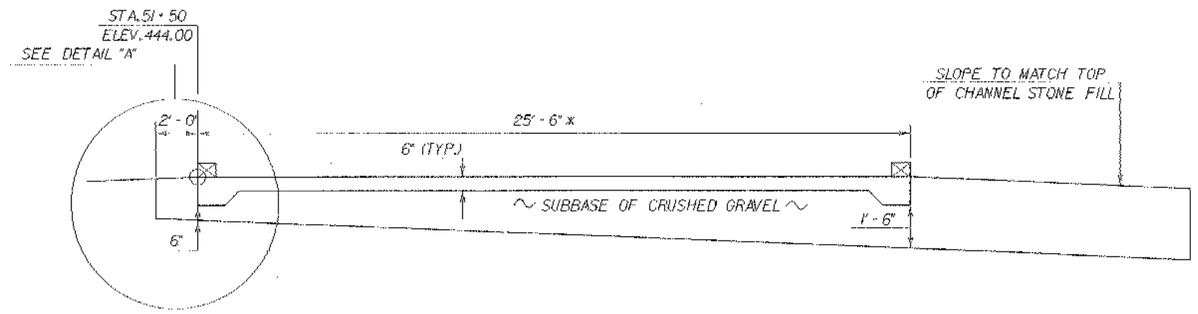

SLAB FOUNDATION ELEVATION

SCALE: 3/8" = 1'-0"

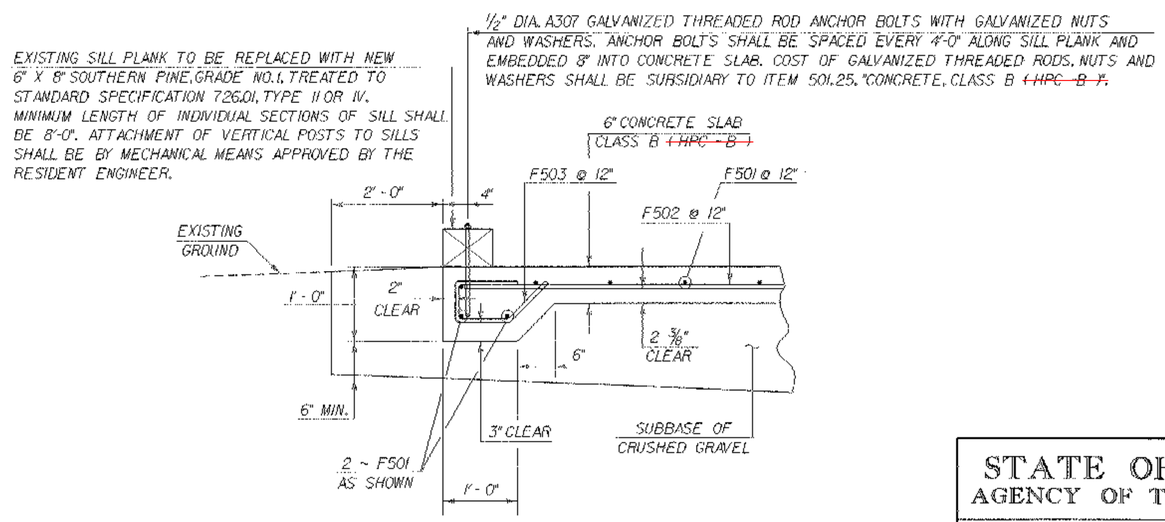

DETAIL "A"

SCALE: 1" = 1'-0"

STATE OF VERMONT AGENCY OF TRANSPORTATION	
Town Of MIDDLEBURY	Bridge No. 20
Highway No. T.H. 33	Log Sta.
	Surv. Sta.
T.H. 33 OVER THE MIDDLEBURY RIVER	
BARN SLAB FOUNDATION DETAILS	
Designed By T. SUMNER	Drawn By K. CHISHOLM
Checked By T. SUMNER Date 7/00	Project Manager R.R. WHITCOMB Date 8/00
PROJECT MIDDLEBURY	PROJECT NO. BRZ 1445 (19)
I.G.C. Info. 90J061\Structures\sJ061sp2.dgn	sJ061slb1
Bridge Sheet No.	Sheet 34 of 55

PLOTTED 26-FEB-2002

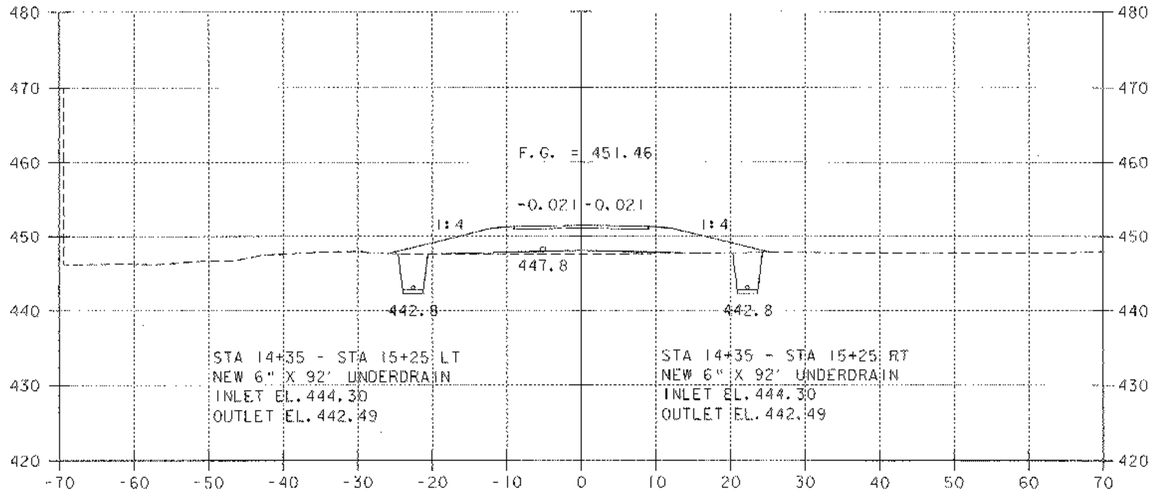

14+50

14+38.50 END BRIDGE
RESUME ROADWAY

15+51.4 END APPROACH
MATCH EXISTING EDGE OF
VT 125 & BUTT FULL DEPTH
SUBBASE MATERIALS

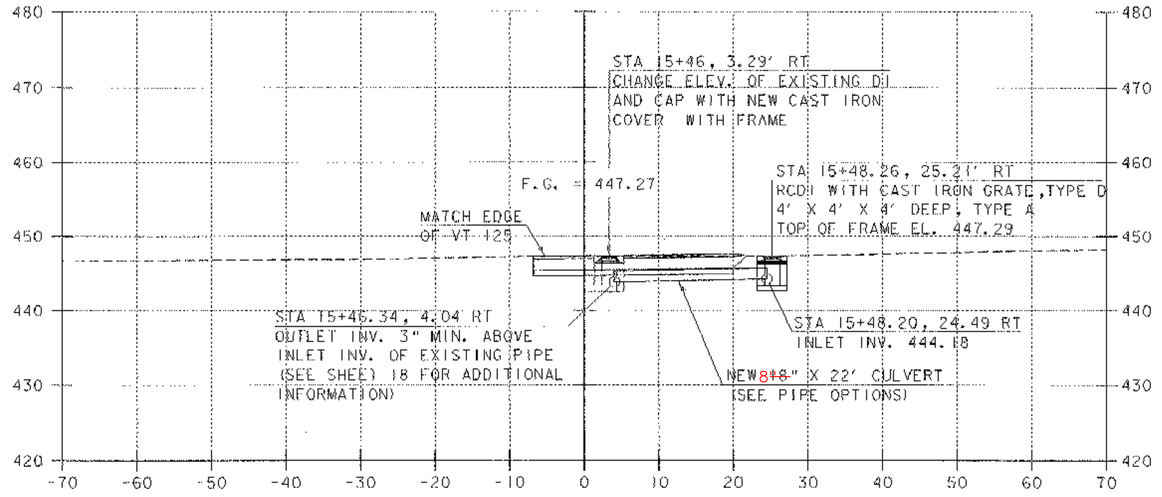

15+50

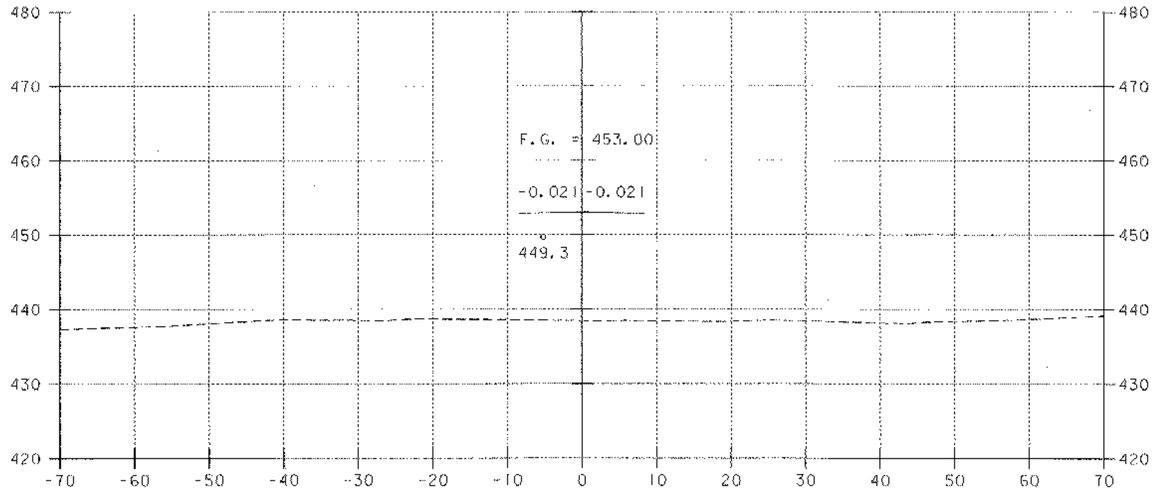

14+00

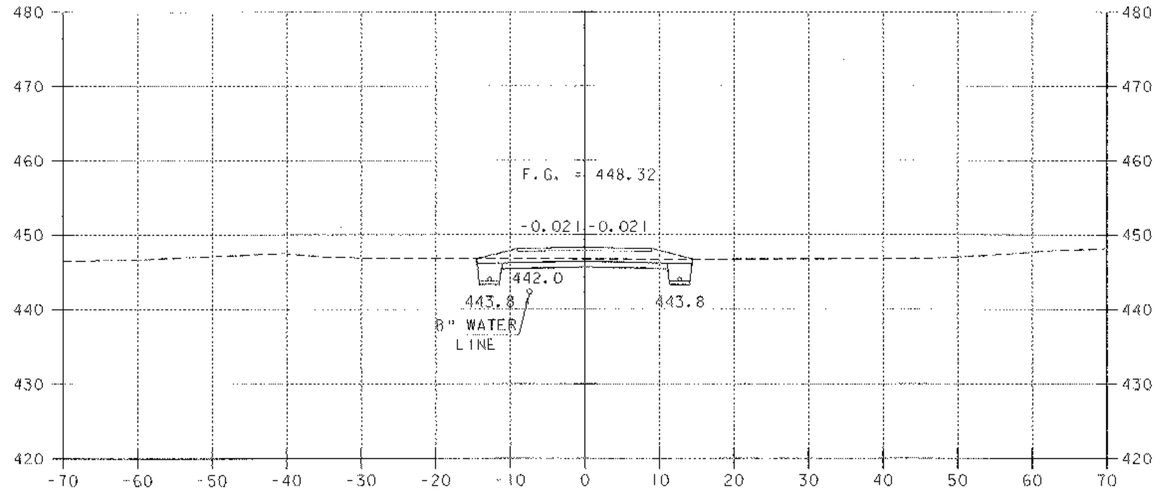

15+00

15+00 END PROJECT

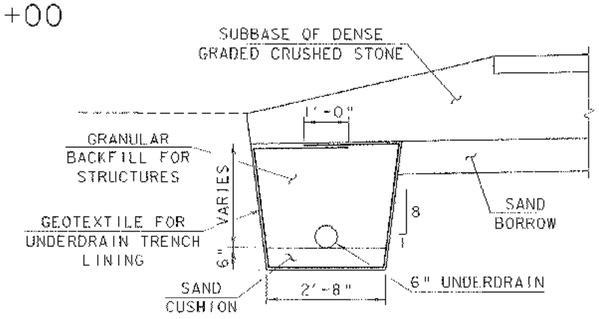

UNDERDRAIN TRENCH DETAIL

NOT TO SCALE

MAINLINE CROSS SECTIONS (3)

PROJECT NAME:	MIDDLEBURY
PROJECT NUMBER:	BRZ 1445 (19)

FILE NAME: 90J061\Structures\sJ06lm03.i		PLOT DATE:	26-FEB-2002
PROJECT MANAGER:	R. R. WHITCOMB	DRAWN BY:	G. ROY
DESIGNED BY:	R. WHITCOMB	CHECKED BY:	T. SUMNER
		SHEET 43	OF 55