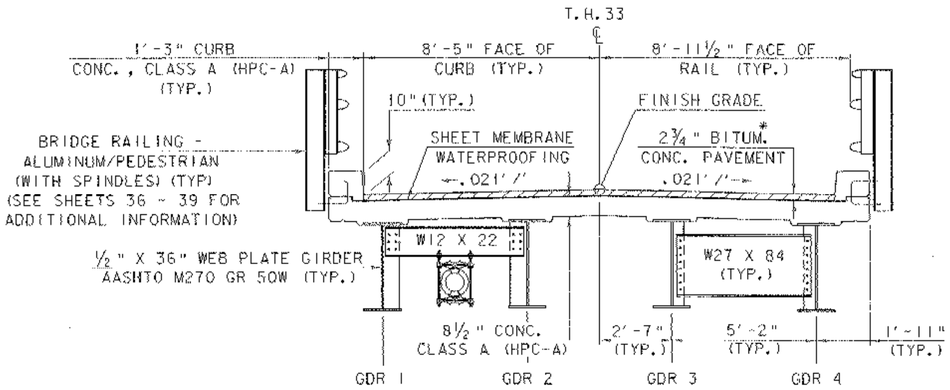

* 1½" TYPE III OVER 1¼" TYPE IV

TYPICAL BRIDGE SECTION

SCALE: ⅜" = 1'-0"

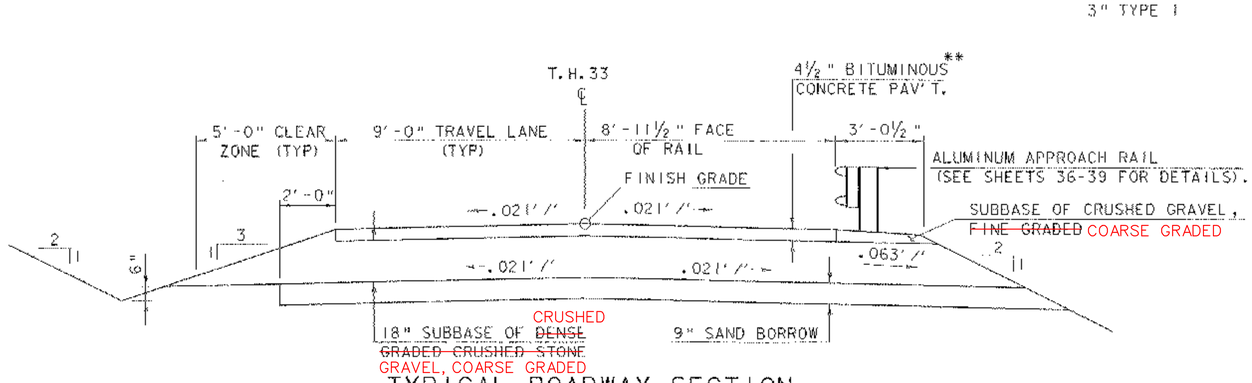

** 1½" TYPE III OVER 3" TYPE I

TYPICAL ROADWAY SECTION

SCALE: ⅜" = 1'-0"

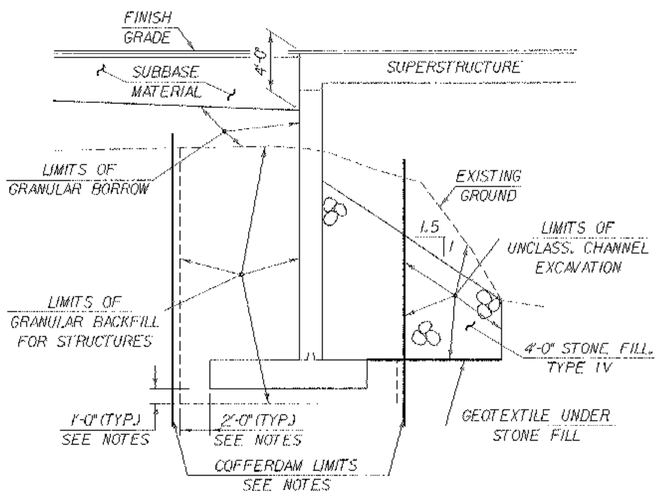

TYPICAL ABUTMENT SECTION

(NOT TO SCALE)

MATERIAL ITEM	TOLERANCE
PAVEMENT	±⅛" TOTAL THICKNESS
BASE COURSE	± ½"
SUBBASE	± 1"
SAND BORROW	± 1"
GRANULAR BORROW	± 1"

NOTES

1. COFFERDAM LIMITS TO BE DETERMINED BY THE CONTRACTOR.
2. THE PAY LIMITS OF "COFFERDAM EXCAVATION, EARTH" AND "COFFERDAM EXCAVATION, ROCK" SHALL BE 2'-0" OUTSIDE THE PERIMETER OF THE FOOTING, UP TO EXISTING GROUND OR BOTTOM OF SUBBASE, WHICHEVER IS LOWER.
3. ONE FOOT UNDERCUT AS DETERMINED NECESSARY BY THE RESIDENT ENGINEER.
4. IF A COFFERDAM IS CONSTRUCTED WHICH IS LARGER THAN THE INDICATED COFFERDAM EXCAVATION PAY LIMITS, PAYMENT FOR ALL UNCLASSIFIED CHANNEL EXCAVATION, INCLUDING THAT PORTION WHICH IS INSIDE THE COFFERDAM BUT OUTSIDE THE COFFERDAM EXCAVATION PAY LIMITS, WILL BE MADE AT THE CONTRACT UNIT PRICE FOR UNCLASSIFIED CHANNEL EXCAVATION.

FINAL HYDRAULICS REPORT

HYDROLOGIC DATA

DRAINAGE AREA: 46.0 sq. mi. (119.1 sq. km)
CHARACTER OF TERRAIN: Hilly to mountainous.
CHARACTER & TYPE OF STREAM: Straight, with a narrow flood plain.

NATURE OF STREAMBED: Gravel, cobbles, and boulders.

Q2.33= 1800 cfs (51 cms) Q50= 5000 cfs (142 cms)
Q10= 3300 cfs (93 cms) Q100= 6000 cfs (170 cms)
Q25= 4200 cfs (119 cms) Q500= 8200 cfs (232 cms)

DATE OF FLOOD OF RECORD: Nov. 1927
WATER SURFACE ELEV.: Unknown ESTIMATED DISCHARGE: Unknown
NATURAL STREAM VELOCITY @ Q25 = 12.6 fps (3.84 mps)
ICE CONDITIONS: Heavy DEBRIS: Moderate
DOES THE STREAM REACH MAXIMUM HIGHWATER ELEVATION RAPIDLY? Yes
IS ORDINARY RISE RAPID? Yes
IS STAGE AFFECTED BY UPSTREAM OR DOWNSTREAM CONDITIONS? No
IF YES, DESCRIBE:

WATERSHED STORAGE 1% HEADWATERS UNIFORM THROUGHOUT WATERSHED X
IMMEDIATELY ABOVE SITE

EXISTING STRUCTURE

STRUCTURE TYPE: Steel beam with timber deck. YEAR BUILT: 1939
CLEAR SPAN (NORMAL TO STREAM): 89 ft. (27.1 m)
VERTICAL CLEARANCE ABOVE STREAMBED: 12 ft. (3.7 m)
WATERWAY OF FULL OPENING: 1070 sq. ft. (99 sq. m)
DISPOSITION OF STRUCTURE: Remove superstructure and south abutment.

TYPE OF MATERIAL UNDER SUBSTRUCTURE: Unknown

WATER SURFACE ELEV. @ Q2.33= 441.3* VELOCITY= 9.8 fps (2.99 mps)
Q10= 442.6* " 11.7 fps (3.57 mps)
Q25= 443.2* " 12.7 fps (3.87 mps)
Q50= 443.7* " 13.5 fps (4.11 mps)
Q100= 443.9* " 14.4 fps (4.39 mps)

LONG TERM STREAM BED CHANGES: None noted.

IS THE ROADWAY OVERTOPPED BELOW THE Q100? No FREQUENCY: N.A.
RELIEF ELEVATION: N.A. DISCHARGE OVER ROAD @ Q100: None

UPSTREAM STRUCTURE: TOWN: Middlebury DISTANCE: 1600 ft. (500 m)
HIGHWAY NO.: T.H. 23 STRUCTURE NO.: 21
STRUCTURE TYPE: Steel beam with concrete deck.
CLEAR SPAN: 42 ft. (12.8 m) CLEAR HEIGHT: 14 ft. (4.3 m)
YEAR BUILT: 1926 FULL WATERWAY: 580 sq. ft. (53.9 sq. m)

DOWNSTREAM STRUCTURE: TOWN: Middlebury DISTANCE: 6100 ft. (1860 m)
HIGHWAY NO.: U.S. 7 STRUCTURE NO.: 125
STRUCTURE TYPE: Three span steel beam with concrete deck.
CLEAR SPAN: 185 ft. (56.4 m) CLEAR HEIGHT: 11 ft. (3.4 m)
YEAR BUILT: 1964 FULL WATERWAY: 2035 sq. ft. (189.1 sq. m)

PROPOSED STRUCTURE

STRUCTURE TYPE: Steel beam with concrete deck.

CLEAR SPAN (NORMAL TO STREAM): 90 ft. (27.4 m)
VERTICAL CLEARANCE ABOVE STREAMBED: 9 ft. (2.7 m)
WATERWAY OF FULL OPENING: 845 sq. ft. (78.5 sq. m)

WATER SURFACE ELEV. @ Q2.33= 442.8* VELOCITY= 9.8 fps (2.99 mps)
Q10= 444.3* " = 11.7 fps (3.57 mps)
Q25= 445.1* " = 12.6 fps (3.84 mps)
Q50= 445.8* " = 13.5 fps (4.11 mps)
Q100= 446.5* " = 14.6 fps (4.45 mps)

IS THE ROADWAY OVERTOPPED BELOW THE Q100? No FREQUENCY: N.A.
RELIEF ELEVATION: 448.5 DISCHARGE OVER ROAD @ Q100: None

AVERAGE LOW ELEVATION OF SUPERSTRUCTURE: 442.5
VERTICAL CLEARANCE @ Q100 = 1.0 ft. (0.3 m)

SCOUR: 2.0 ft. (0.6 m), total contraction + long term
REQUIRED CHANNEL PROTECTION: Stone fill, type IV

PERMIT INFORMATION

AVERAGE DAILY FLOW: 90 cfs (2.5 cms)
ORDINARY LOW WATER: 40 cfs (1.1 cms) DEPTH: 1 ft. (0.3 m)
ORDINARY HIGH WATER: 775 cfs (21.9 cms) DEPTH: 3 ft. (0.9 m)

TEMPORARY BRIDGE REQUIREMENTS

STRUCTURE TYPE: No temporary bridge required. Use existing bridge.

* The new bridge is 120 ft. (37 m) upstream of the existing bridge, thus water surface elevations are higher at the new bridge.

DESIGN CRITERIA:
1. DESIGN LIVE LOAD AASHTO HS-25-44
2. DESIGN SPAN 92' CTR. - CTR. BRG.
3. ALLOWABLE LOAD FOR SPREAD FOOTINGS ON SOIL A1=3.4 KSF & A2=6.3 KSF ON LEDGE NA
4. ALLOWABLE LOAD FOR PILING NA TYPE NA ESTIMATED LENGTH NA
5. STRUCTURAL STEEL AASHTO GRADE M270 GRADE 50W
6. REINFORCING STEEL GRADE 60
7. CONCRETE CLASS A (HPC-A) f_c = 4000 PSI
   CONCRETE CLASS B (HPC-B) f_c = 3500 PSI

TRAFFIC MAINTENANCE:
1. IS TRAFFIC TO BE MAINTAINED? YES IF YES, ON EXISTING STRUCTURE YES OR ON TEMPORARY BRIDGE NA
2. TEMPORARY BRIDGE REQUIREMENTS: ONE OR TWO WAY NA TRAFFIC CONTROL SIGNALS REQUIRED NA
   MINIMUM CLEAR SPAN (NORMAL TO STREAM) NA VERTICAL CLEARANCE ABOVE STREAMBED NA
   WATERWAY OF FULL OPENING NA
   ARE SIDEWALKS REQUIRED? NA IF SO, ON WHAT SIDE? NA
   STRUCTURE TYPE: NA

LOAD FACTOR LOAD RATING (TONS)

LOADING LEVELS (LOAD FACTOR)	TRUCK						
	H	HS	3S2	6 AXLE	3A. STR.	4A. STR.	5A. SEMI
INVENTORY A=2.17; B=1.00	34	49					
POSTED A=1.55; B=1.40	47	68	78		63	64	72
OPERATING A=1.30; B=1.67		81	93	110	75	76	

STRENGTH RF: $\frac{\phi M_N - 1.3\, M_{DL}}{A \times M_{LL+I}}$ SERVICEABILITY RF: $B \left[\frac{.95\, F_y S_{LL+I} - M_{DL} \frac{S_{LL+I}}{S_{DL}} - M_{SBL} \frac{S_{LL+I}}{S_{SBL}}}{1.67\, M_{LL+I}} \right]$

TRAFFIC DATA

YEAR	ADT	DHV	% D	% T	ADTT
1998	80	10	--	<1	--
2018	100	15	--	<1	--

18 kip ESAL for flexible pavement from 1998 to 2018: <50000
18 kip ESAL for flexible pavement from 1998 to 2018: <50000
Design speed: 20 MPH

STATE OF VERMONT
AGENCY OF TRANSPORTATION

Town Of MIDDLEBURY	Bridge No. 20
Highway No. T.H. 33	Log Sta. / Surv. Sta.
T.H. 33 OVER THE MIDDLEBURY RIVER	
PRELIMINARY INFORMATION SHEET	
Designed By R. WHITCOMB	Drawn By G. ROY
Checked By T. SUMNER Date 7/99	Project Manager R.R. WHITCOMB Date 8/00
PROJECT MIDDLEBURY	PROJECT NO. BRZ 1445 (19)
I.G.C. Info. 90/061\Structures\s061pl.dgn	s061pl1
Bridge Sheet No.	Sheet 2 of 55

PLOTTED 26-FEB-2002