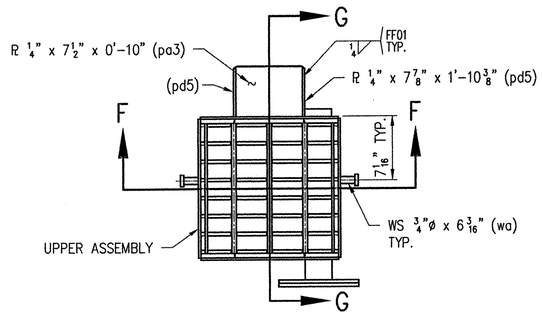

PLAN VIEW

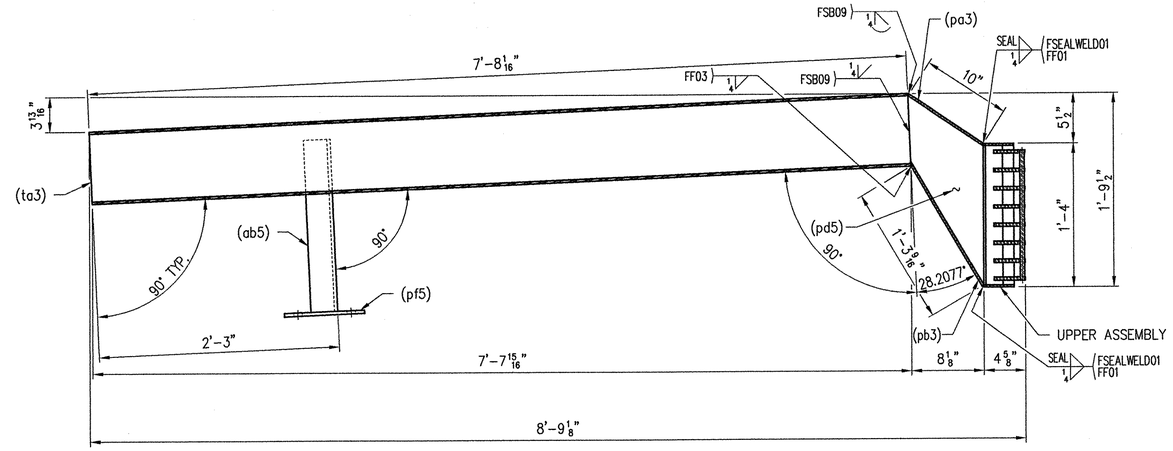

SECTION "G-G"

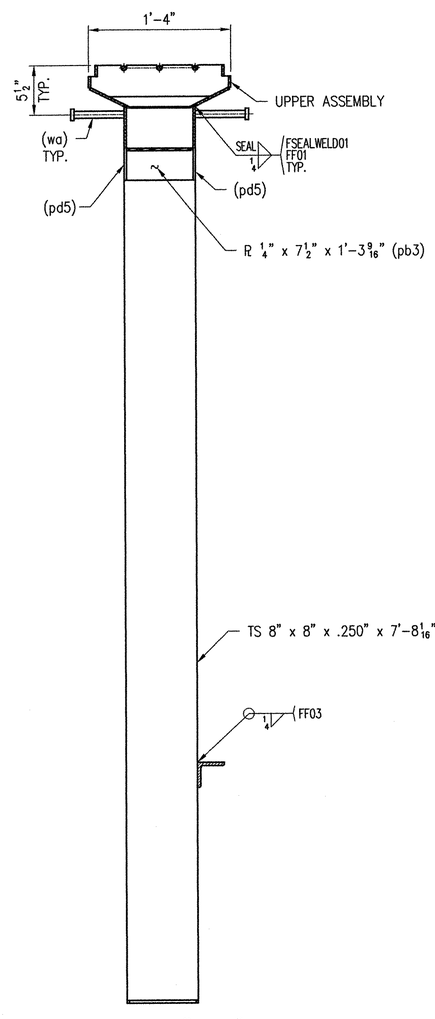

SECTION "F-F"

1 - DOWNSPOUT SCUPPER(S) - 3A

SEE SHEET NO. 1 FOR GENERAL NOTES.
SEE SHEET NO. 5 FOR DETAILS OF (pf5) & (ab5).
SOME HIDDEN LINES REMOVED FOR CLARITY.

RECEIVED
CK'D BY LJMS OK'D BY
DEC 12 2001
RESUBMIT APPROVED ✓
BY CPW DATE 12/21/01

SHOP NOTE:
SEAL WELD ALL ACCESSIBLE JOINTS FOR GALVANIZING.

SHOP	
APPROVAL	
DIST.	
CUST.	
FOR PRINTS ISSUED	DATE

REV.	DESCRIPTION	DATE	INT

ANY AND ALL BACKCHARGES WILL BE REJECTED UNLESS WRITTEN CONSENT IS GIVEN BY LEWIS ENGINEERING COMPANY PRIOR TO ANY WORK PERFORMED FOR OUR ACCOUNT. SUCH REJECTION MEANS THAT INVOICES WILL NOT BE HONORED OR DEDUCTIONS FROM PAYMENT WILL BE CHARGED BACK.

LEWIS ENGINEERING COMPANY
4201 NOREX DRIVE – CHASKA, MINNESOTA 55318 – (612) 368-3000

PROJECT — ROYALTON ~ ROUTE NO. T.H. 1 ~ C.L. 1 BRIDGE NO. 3
STATE PROJECT — AC BRZ 1444(22)
FEDERAL PROJECT — –
CUSTOMER — BECK & BELLUCCI, INC.
LOCATION — WINDSOR COUNTY, VT
DESCRIPTION — SCUPPER(S) DETAILS

Orig.
W.P. chk'd TSF
Drawn By JMB
Chk'd. By TSF
Date: 12/5/01

SHEET NO. 3 OF 5
Job. No. : 2034.1236.2