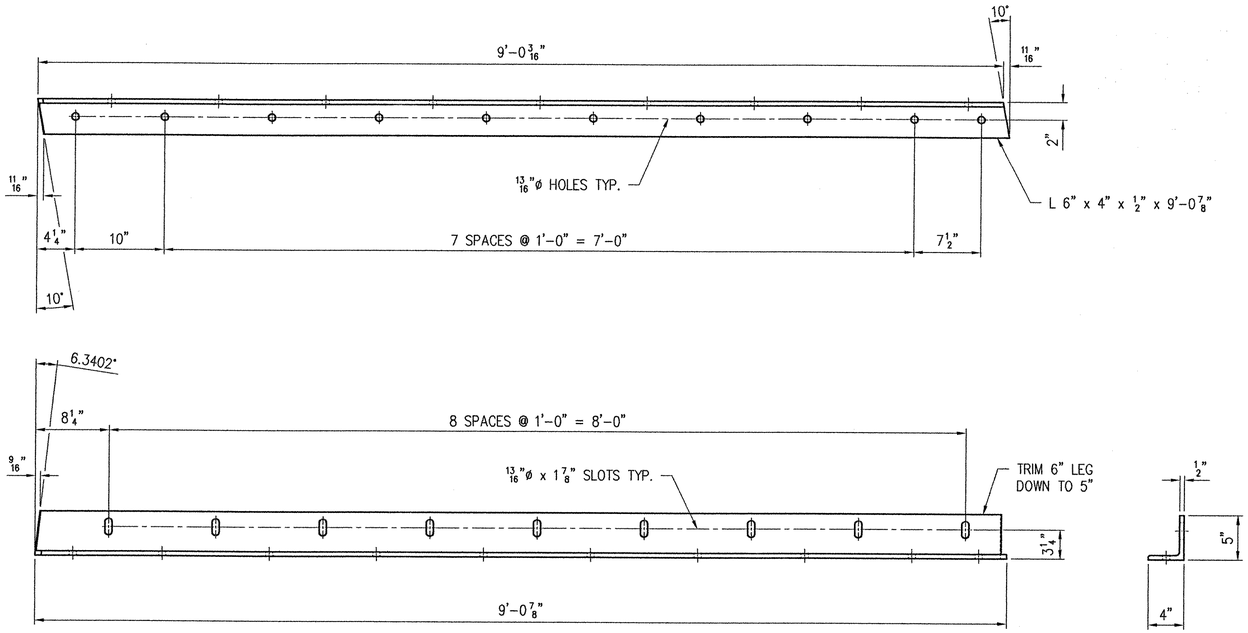

DETAIL (aa10)

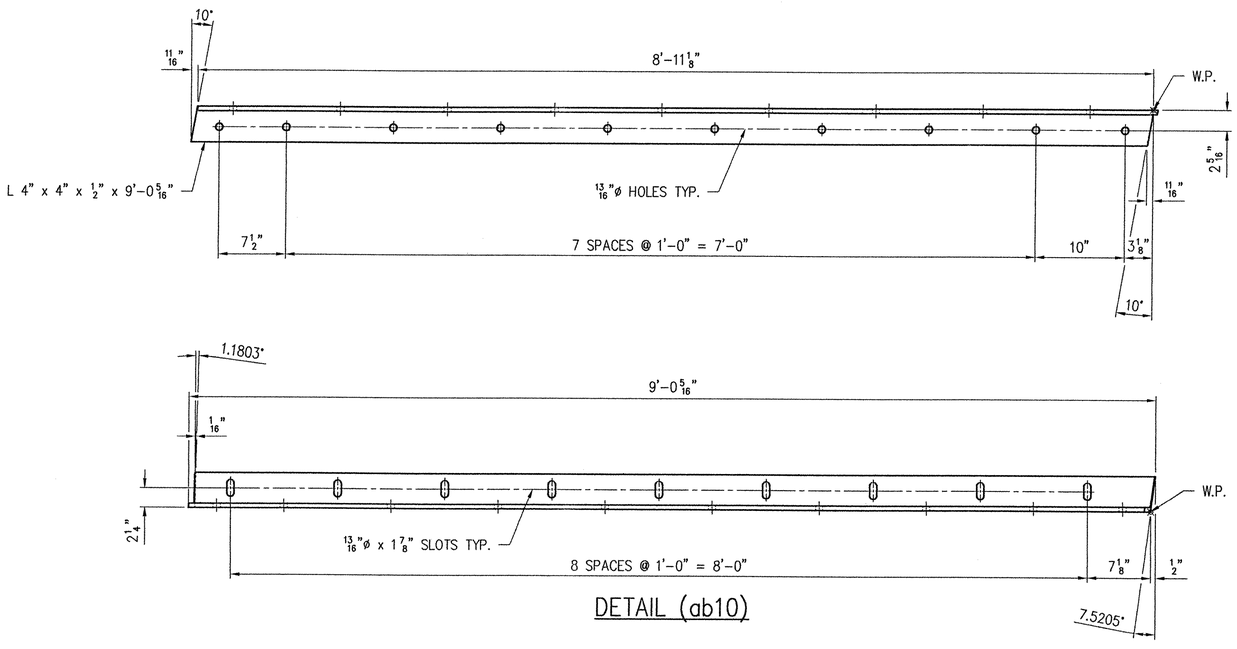

DETAIL (ab10)

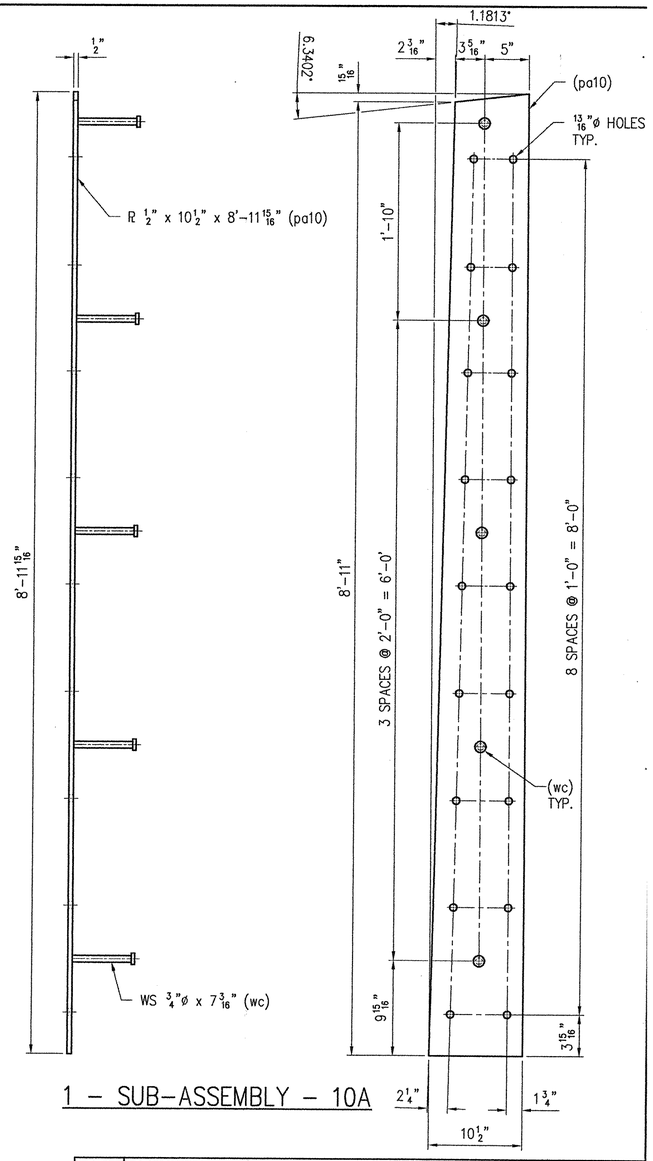

1 – SUB-ASSEMBLY – 10A

RECEIVED
CK'D BY LWS OK'D BY
JAN 11 2002
RESUBMIT APPROVED ✓
BY CPW DATE 1/11/02

SEE SHEET NO. 15 FOR GENERAL NOTES.
WORK THIS SHEET WITH SHEET NO. 8, 9, 11 & 12.

REV.	DESCRIPTION	DATE	INT.

ANY AND ALL BACKCHARGES WILL BE REJECTED UNLESS WRITTEN CONSENT IS GIVEN BY LEWIS ENGINEERING COMPANY PRIOR TO ANY WORK PERFORMED FOR OUR ACCOUNT. SUCH REJECTION MEANS THAT INVOICES WILL NOT BE HONORED OR DEDUCTIONS FROM PAYMENT WILL BE CHARGED BACK.

LEWIS ENGINEERING COMPANY
4201 NOREX DRIVE – CHASKA, MINNESOTA 55318 – (952) 368-3000

PROJECT — ROYALTON / RTE. NO. TH 1, CL 1 BRIDGE NO. 3
STATE PROJECT — AC BRZ 1444(22)
FEDERAL PROJECT —
CUSTOMER — BECK & BELLUCCI, INC.
LOCATION — WINDSOR COUNTY, VT
DESCRIPTION — EXPANSION JOINT DETAILS ABUTMENT NO. 2

Orig.
W.P. chk'd
Drawn By JMB
Chk'd. By TSF
Date: 12/5/01

SHOP
APPROVAL
DIST.
CUST.
FOR PRINTS ISSUED — DATE

L.E.C. 10 OF 30 | SHEET NO. 10 OF 15 | Job. No. : 2034.1042.1