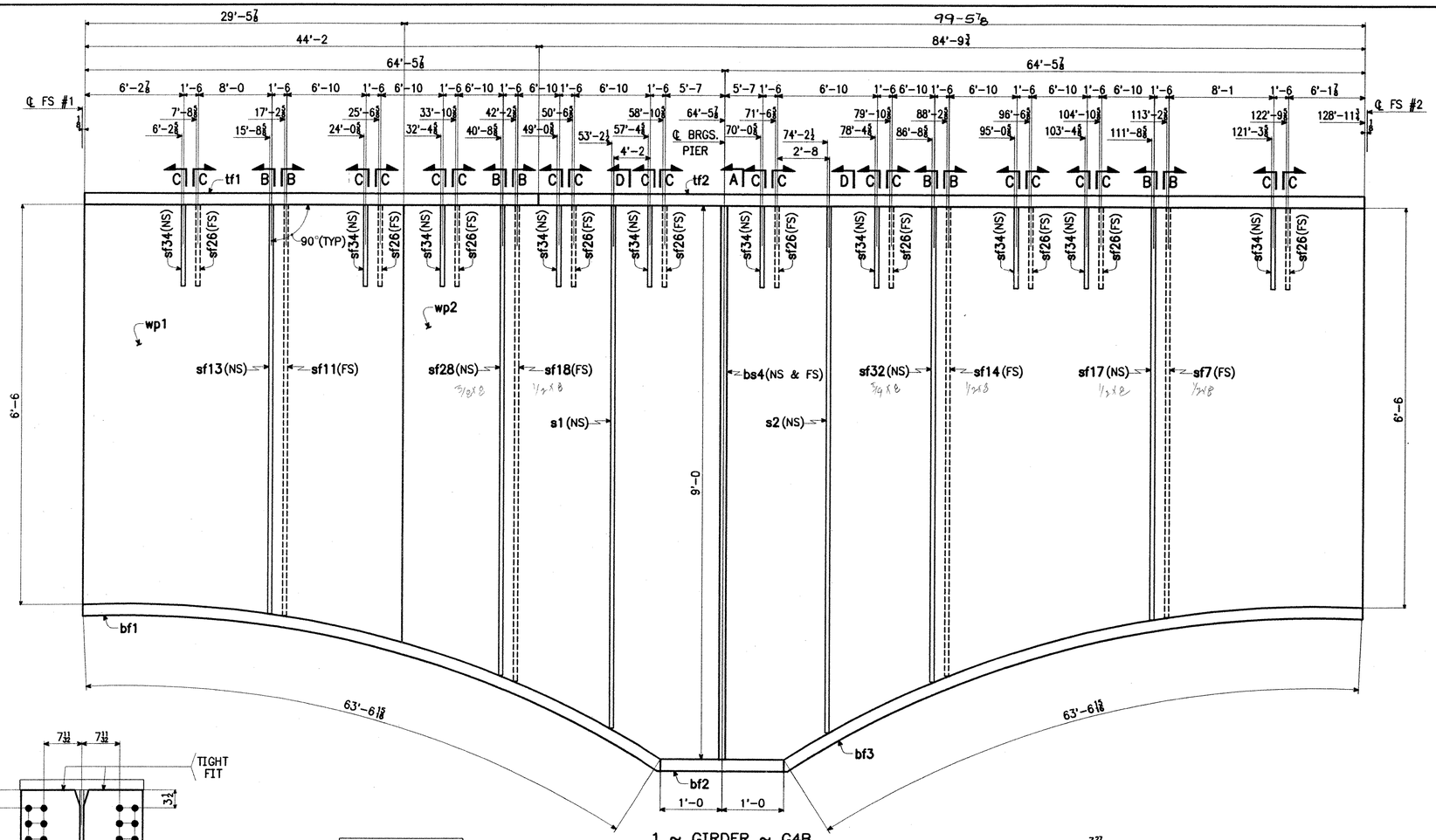

1 ~ GIRDER ~ G4B

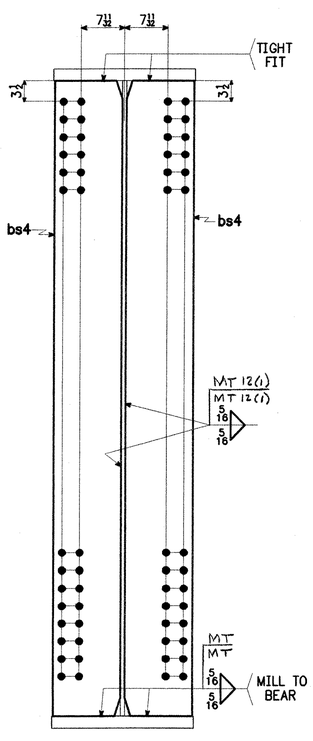

SECT. A

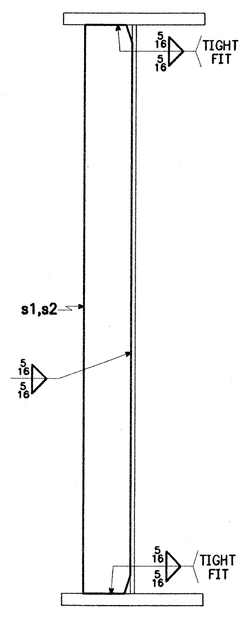

SECT. D

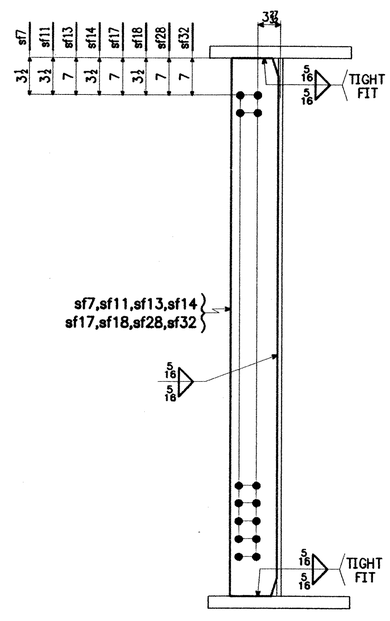

SECT. B

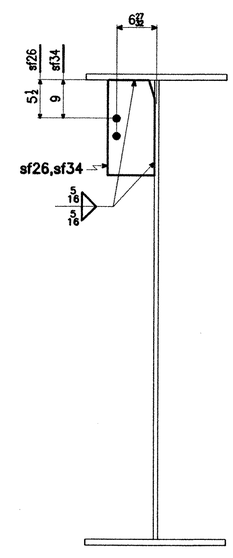

SECT. C

SHIP MARK	NO.	MARK	SHAPE	LENGTH		ITEM NO.	WT.	REMARKS
G4B	1		GIRDER					
	1	tf1	PL 2 1/4 x 24	44'-2	S1/8	2/2	8116	CVN
	1	tf2	PL 2 1/4 x 24	84'-9 3/4	S1/2	2/3	15584	CVN
	1	bf1	PL 2 1/4 x 24	63'-6 15/16	S1/4	2/4	11682	CVN
	1	bf2	PL 2 1/4 x 24	2'-0		2/5	368	CVN
	1	bf3	PL 2 1/4 x 24	63'-6 15/16	S1/6	2/6	11682	CVN
	1	wp1	PL 11/16 x 82 3/8	29'-5 7/8	B/10	1/4		CVN
	1	wp2	PL 11/16 x 108	99'-5 7/8		1/5	26140	CVN
	2	bs4	PL 1 1/4 x 11 1/2	9'-0	S1/11	3/2	880	M1E
	1	sf7	PL 1/2 x 8	6'-6 7/16	S3/2	3/5	89	
	1	sf11	PL 1/2 x 8	6'-6 11/16		3/5	89	
	1	sf13	PL 1/2 x 8	6'-6 7/16		3/5	89	
	1	sf14	PL 1/2 x 8	7'-4 1/4		3/6	100	
	1	sf17	PL 1/2 x 8	6'-6 11/16		3/5	89	
	1	sf18	PL 1/2 x 8	7'-5 1/4		3/6	101	
	1	sf28	PL 3/4 x 8	7'-4 1/4	S3/14	3/6	150	
	1	sf32	PL 3/4 x 8	7'-5 1/4	S3/14	3/6	152	
	10	sf26	PL 1/2 x 8	1'-4	S3/2	3/8	181	
	10	sf34	PL 1/2 x 8	1'-4		3/8	181	
	1	s1	PL 3/4 x 8	8'-1 7/8	S3/14	3/17	167	
	1	s2	PL 3/4 x 8	8'-3 1/4	S3/14	3/17	169	
							76009#	

BILL OF MATERIAL

WORK ORDER NO.	DRAWING NO.	REV.
15873	12-19	B

NOTES:

1. FOR GENERAL NOTES, SEE SHT. GN1.
2. FOR GIRDER CAMBER DIAGRAM, SEE DWG. 12-7.
3. FOR GIRDER STANDARD DETAILS, SEE DWG. 12-9.
4. FOR FIELD SPLICE DETAIL, SEE DWG. 12-10.

RECEIVED
CK'D BY WBS OK'D BY
AUG 27 2001
RESUBMIT ____ APPROVED ✓
BY CPW DATE 8/30/01

STEEL: ASTM [ ] A709-36 [ ] A709-50 [X] A709-50W [ ] Unless Noted
WELDING ELECTRODE: [X] E70 [ ] See Welding Proc. [ ] None
HOLES: [ ] 13/16 [X] 15/16 [ ] 1 1/16 [ ] Unless Noted [ ] As Noted [ ] None
PAINT: [X] None [ ] Galv. After Fab. [ ] As Noted
SPECIAL PAINT:
SPECIAL CLEANING: [X] Blast Clean SSPC SP10 [ ] None

ITEM NO.506.55 | BR. NO. 3 | PROJ. NO. BRZ 1444(22)

TITLE: GIRDER ~ G4B

FOR APPROVAL

APPROVED:

PRINT DIST.		
5	4-7-01	APPR.
ORIG.		FAB.
5	7-13-01	APPR
5	8-24-01	APP

National Eastern Corporation
Plainville, Connecticut

JOB: T.H. 1 OVER THE WHITE RIVER
ROYALTON, VERMONT

CUSTOMER: BECK & BELLUCCI, INC.

DESIGNER: VERMONT AGENCY OF TRANSPORTATION

			WORK ORDER NO.	DRAWING NO.	REV.
CHECKED	TS	3/01	15873	12-19	B
DRAWN	AV	3/01			