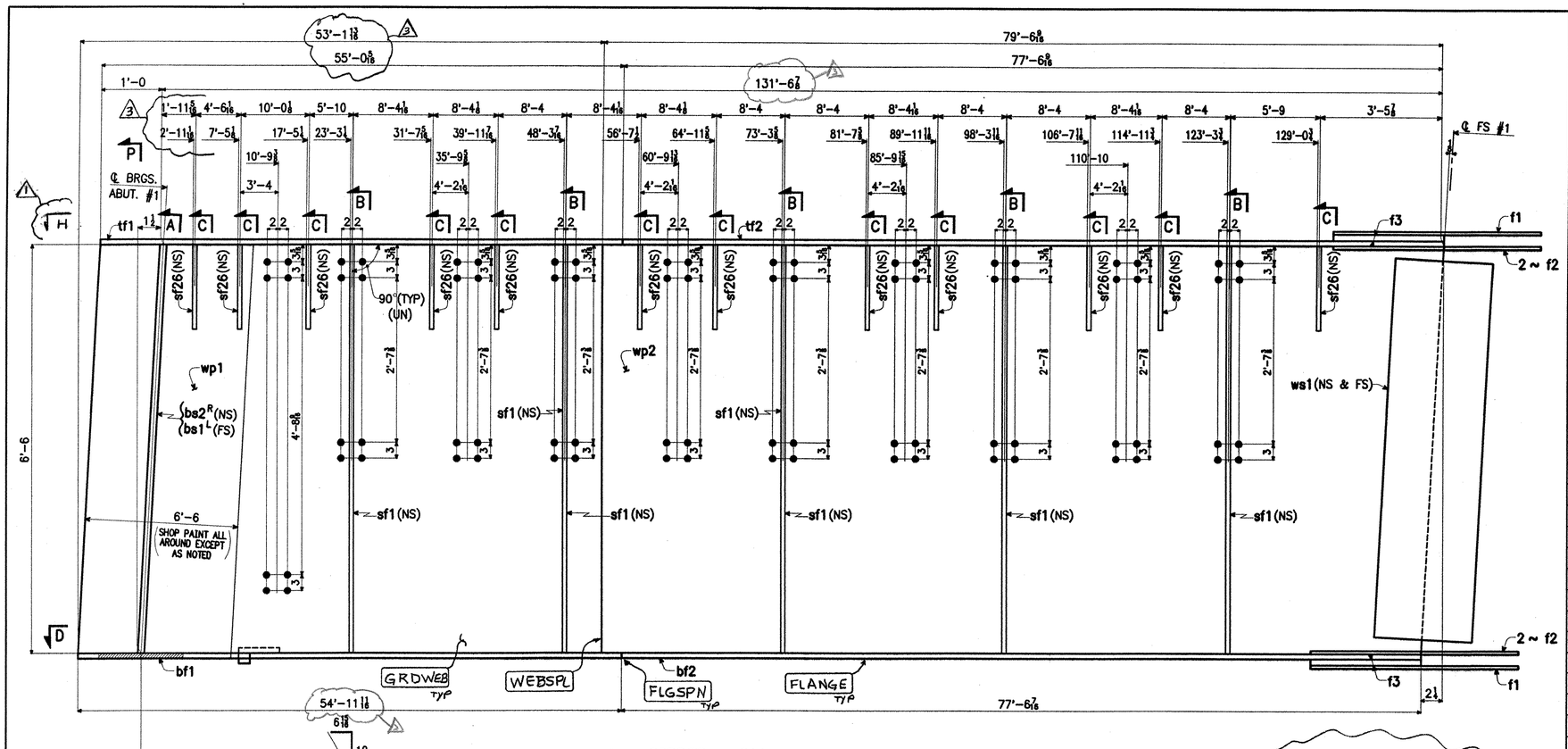

1 ~ GIRDER ~ G1A

GIRDER

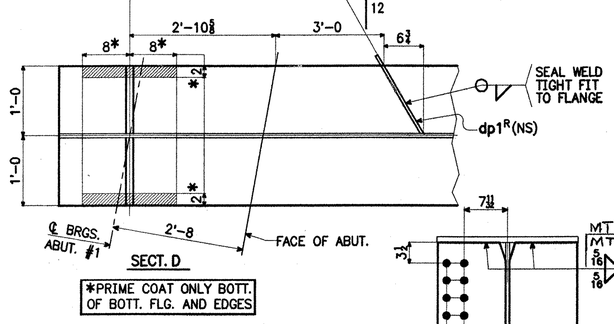

SECT. D

*PRIME COAT ONLY BOTT. OF BOTT. FLG. AND EDGES

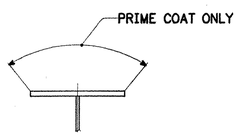

SECT. P

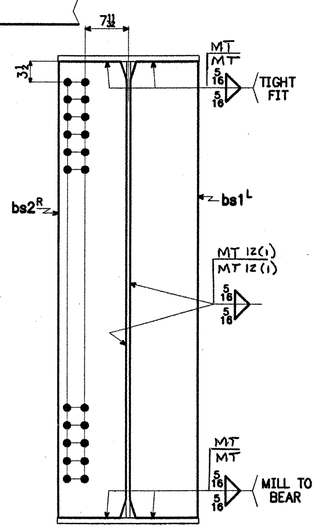

SECT. A

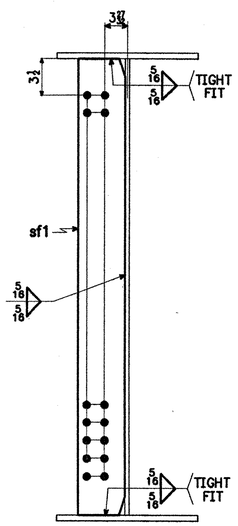

SECT. B

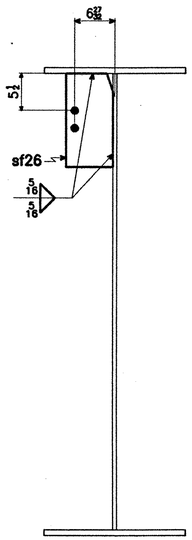

SECT. C

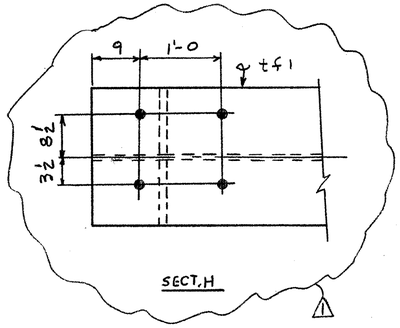

SECT. H

NOTES:

1. FOR GENERAL NOTES, SEE SHT. GN1.
2. FOR GIRDER CAMBER DIAGRAM, SEE DWG. 12-1.
3. FOR GIRDER STANDARD DETAILS, SEE DWG. 12-9.
4. FOR FIELD SPLICE DETAIL, SEE DWG. 12-10.

RECEIVED
CK'D BY WAS OK'D BY
DEC 27 2001
RESUBMIT APPROVED As Noted
BY DATE 1/4/02

3 FLG, WEB & EXT DIM 12-17-01 AV
2 PAINT NOTE 11-19-01 JCM
1 SECT H 9-11-01 JCM

SHIP MARK	NO.	MARK	SHAPE	LENGTH		ITEM NO.	WT.	REMARKS
G1A	1		GIRDER					
	1	tf1	PL 1" x 24	55'-0 5/8	3 5'-1/15	1/9	4494	CVN
	1	tf2	PL 1" x 24	77'-6 9/16	5'-1/14	1/10	6333	CVN
	1	bf1	PL 1" x 24	54'-11 11/16	3 5'-1/15	1/11	4490	CVN
	1	bf2	PL 1" x 24	77'-6 7/16	5'-1/14	1/12	6332	CVN
	1	wp1	PL 15/16 x 78	53'-1 13/16	5'-2/3	1/2	X	CVN
	1	wp2	PL 15/16 x 78	79'-6 9/16	5'-2/3	1/3	24185	CVN
	1	bs1R	PL 1 1/4 x 11 1/2	6'-6 1/8	5'-1/11	3/2	318	M1E
	1	bs2L	PL 1 1/4 x 11 1/2	6'-6 1/8	∫	3/2	318	M1E
	5	sf1	PL 1/2 x 8	6'-6	5'-3/4	3/4	442	
12	11	sf26	PL 1/2 x 8	1'-4	∫	3/8	200	
	1	dp1R	PL 1/4 x 3	1'-3 5/8	5'-3/12	3/10	3	
	2	f1	PL 5/8 x 24	3'-4 1/2	5'-2/5	2/10	345	CVN
	4	f2	PL 5/8 x 10	3'-4 1/2	∫	2/11	287	CVN
	2	f3	PL 1 1/4 x 24	1'-9 5/8	5'-1/12	2/13	368	
	2	ws1	PL 5/8 x 72 1/2	1'-7 1/2	5'-2/5	2/12	501	CVN
					3		48616 #	

BILL OF MATERIAL	WORK ORDER NO.	DRAWING NO.	REV.
	15873	12-11	3

STEEL: ASTM [ ] A709-36 [ ] A709-50 [X] A709-50W [ ] Unless Noted
WELDING ELECTRODE: [X] E70 [ ] See Welding Proc. [ ] None
HOLES: [ ] 13/16 [X] 15/16 [ ] 1 1/16 [ ] Unless Noted [ ] As Noted [ ] None
PAINT: 2 [ ] None [ ] Galv. After Fab. [ ] As Noted [X] SEE SHT GN1
SPECIAL PAINT:
SPECIAL CLEANING: [X] Blast Clean SSPC SP10 [ ] None

ITEM NO. 506.55 | BR. NO. 3 | PROJ. NO. BRZ 1444(22)

TITLE: GIRDER ~ G1A

APPROVED: 9-5-01		
PRINT DIST.		
5	4-7-01	APPR.
ORIG.	9-5-01	FAB.
5	7-13-01	APP
5	8-24-01	APP
5	9-12-01	APP
12	9-12-01	FAB
5	11-19-01	APP
11	11-19-01	FAB
5	12-18-01	APP
11	12-18-01	FAB
CHECKED	TS	3/01
DRAWN	AV	3/01

National Eastern Corporation
Plainville, Connecticut

JOB: T.H. 1 OVER THE WHITE RIVER
ROYALTON, VERMONT

FOR APPROVAL

CUSTOMER: BECK & BELLUCCI, INC.

DESIGNER: VERMONT AGENCY OF TRANSPORTATION

REVISED

WORK ORDER NO.	DRAWING NO.	REV.
15873	12-11	3