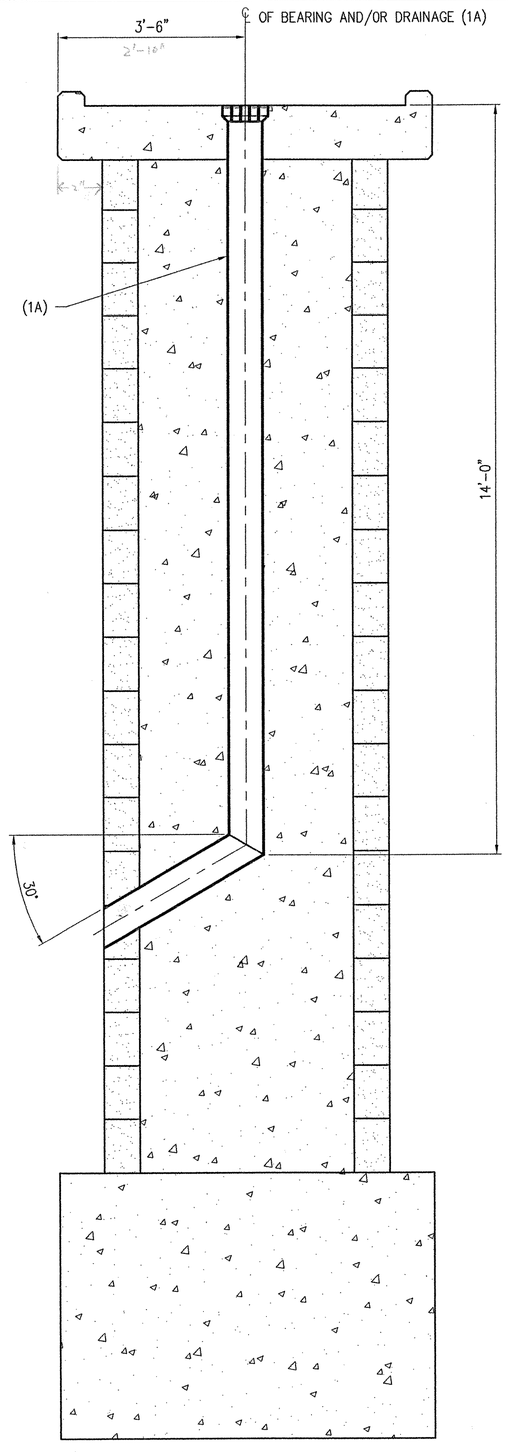


SECTION A-A

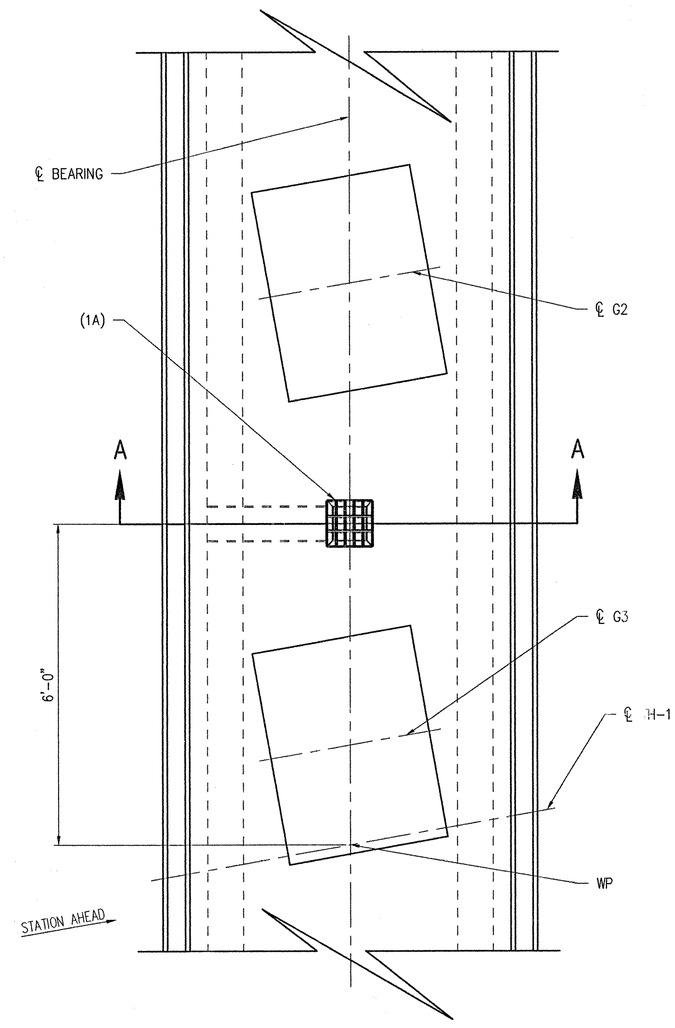


PLAN VIEW OF DRAINAGE @ PIER

SOME HIDDEN LINES REMOVED FOR CLARITY.
SEE SHEET NO. 2 FOR GENERAL NOTES.

| REV. | DESCRIPTION | DATE | INT. |
|---|---|---|---|

ANY AND ALL BACKCHARGES WILL BE REJECTED UNLESS WRITTEN CONSENT IS GIVEN BY LEWIS ENGINEERING COMPANY PRIOR TO ANY WORK PERFORMED FOR OUR ACCOUNT. SUCH REJECTION MEANS THAT INVOICES WILL NOT BE HONORED OR DEDUCTIONS FROM PAYMENT WILL BE CHARGED BACK.

RECEIVED
OK'D BY ____ OK'D BY LWS
JUN 11 2001
RESUBMIT ____ APPROVED As Noted
BY CPW DATE 7/3/01

| | |
|---|---|
| SHOP | |
| APPROVAL | |
| DIST. | |
| CUST. | |
| FOR PRINTS ISSUED | DATE |

LEWIS ENGINEERING COMPANY
4201 NOREX DRIVE - CHASKA, MINNESOTA 55318 - (612) 368-3000

PROJECT — ROYALTON ~ ROUTE NO. T.H. 1 ~ C.L. 1 BRIDGE NO. 3
STATE PROJECT — AC BRZ 1444(22)
FEDERAL PROJECT — –
CUSTOMER — BECK & BELLUCCI, INC.
LOCATION — WINDSOR COUNTY, VT
DESCRIPTION — SCUPPER(S) ERECTION PLAN @ PIER

| | |
|---|---|
| W.P. chk'd | Orig |
| Drawn By | JMB |
| Chk'd. By | TSF |
| Date: | 5/25/01 |

SHEET NO. E1 OF 3 | Job. No. : 2034.1236.1