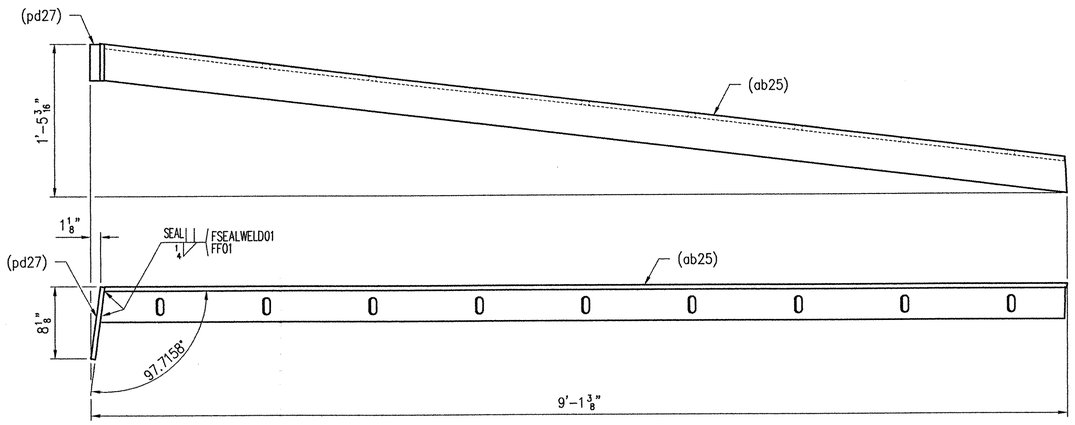


1 - SUB-ASSEMBLY - 24A

(SOME HIDDEN LINES REMOVED FOR CLARITY)

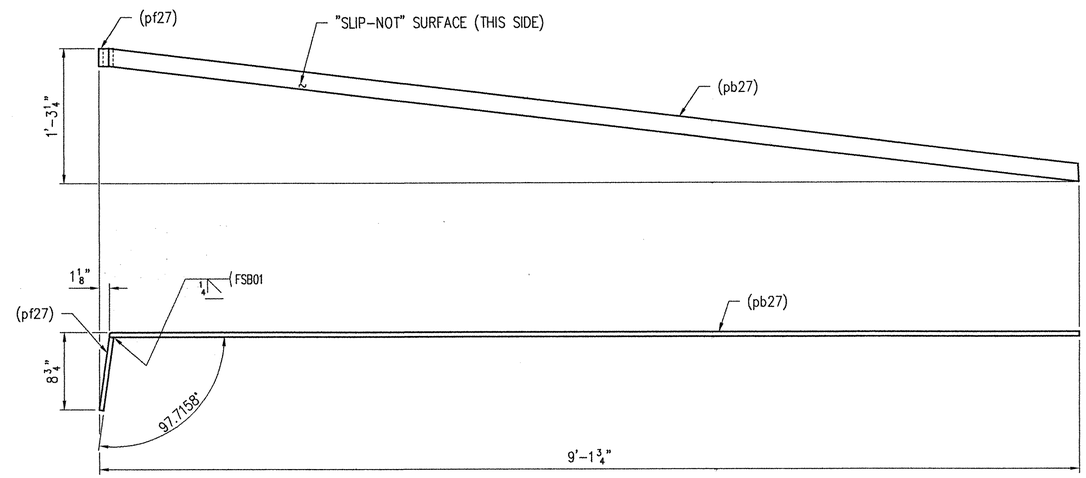


1 - SUB-ASSEMBLY - 24C

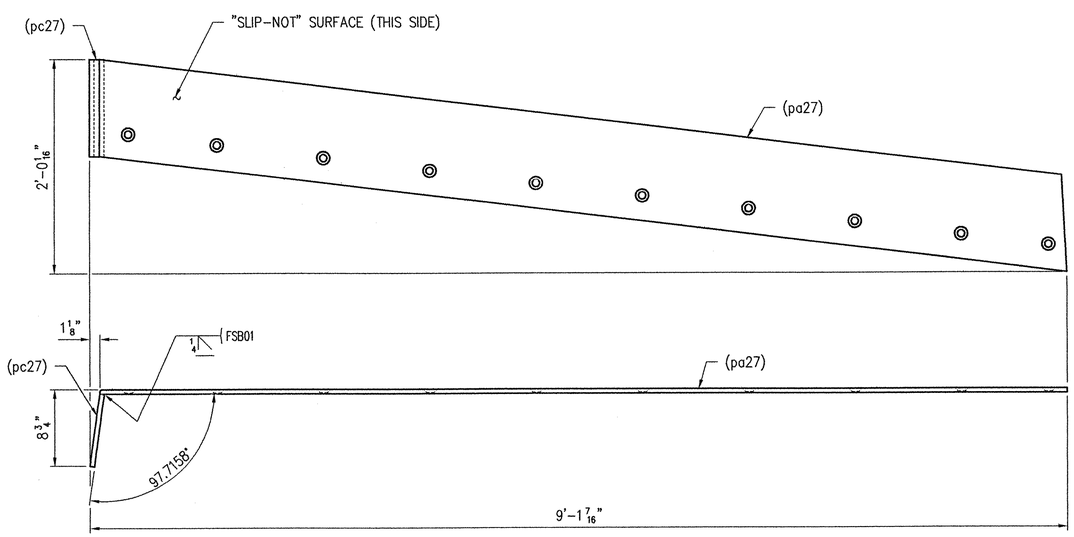


1 - SUB-ASSEMBLY - 24B

SEE SHEET NO. 30 FOR GENERAL NOTES.
WORK THIS SHEET WITH SHEET NO. 23, 25, 26 & 27.

| REV. | DESCRIPTION | DATE | INT. |
|---|---|---|---|
| 1 | GENERAL REVISION PER APPROVAL. | 1/11/02 | JMB |

ANY AND ALL BACKCHARGES WILL BE REJECTED UNLESS WRITTEN CONSENT IS GIVEN BY LEWIS ENGINEERING COMPANY PRIOR TO ANY WORK PERFORMED FOR OUR ACCOUNT. SUCH REJECTION MEANS THAT INVOICES WILL NOT BE HONORED OR DEDUCTIONS FROM PAYMENT WILL BE CHARGED BACK.

LEWIS ENGINEERING COMPANY

4201 NOREX DRIVE - CHASKA, MINNESOTA 55318 - (952) 368-3000

| | | |
|---|---|---|
| PROJECT | — | ROYALTON / RTE. NO. TH 1, CL 1 BRIDGE NO. 3 |
| STATE PROJECT | — | AC BRZ 1444(22) |
| FEDERAL PROJECT | — | |
| CUSTOMER | — | BECK & BELLUCCI, INC. |
| LOCATION | — | WINDSOR COUNTY, VT |
| DESCRIPTION | — | EXPANSION JOINT DETAILS ABUTMENT NO. 1 |

| | |
|---|---|
| W.P. chk'd | Orig. |
| Drawn By | JMB |
| Chk'd. By | TSF |
| Date: | 12/20/01 |

| | |
|---|---|
| SHOP | |
| APPROVAL | |
| DIST. | |
| CUST. | |
| FOR PRINTS ISSUED | DATE |

RECEIVED
OK'D BY WRS OK'D BY
JAN 21 2002
RESUBMIT APPROVED ✓
BY CPW DATE 1/24/02

L.E.C. 24 OF 30 | SHEET NO. 9 OF 15 | Job. No. : 2034.1042.1