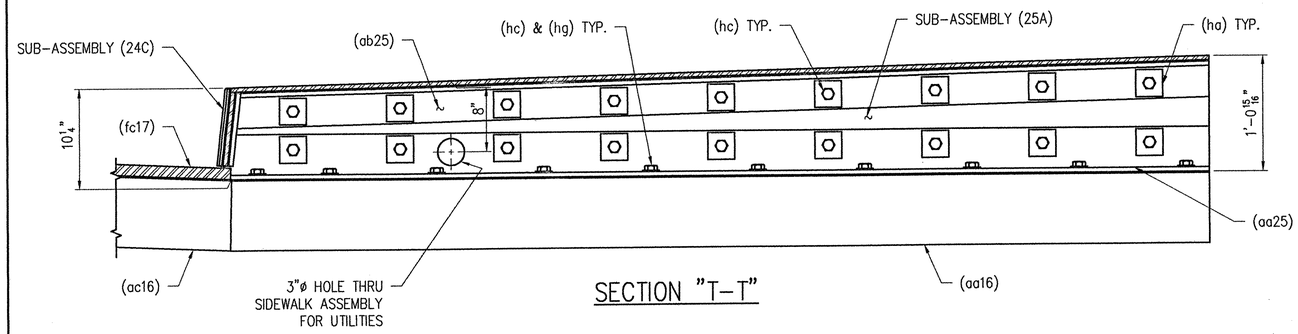

SECTION "T-T"

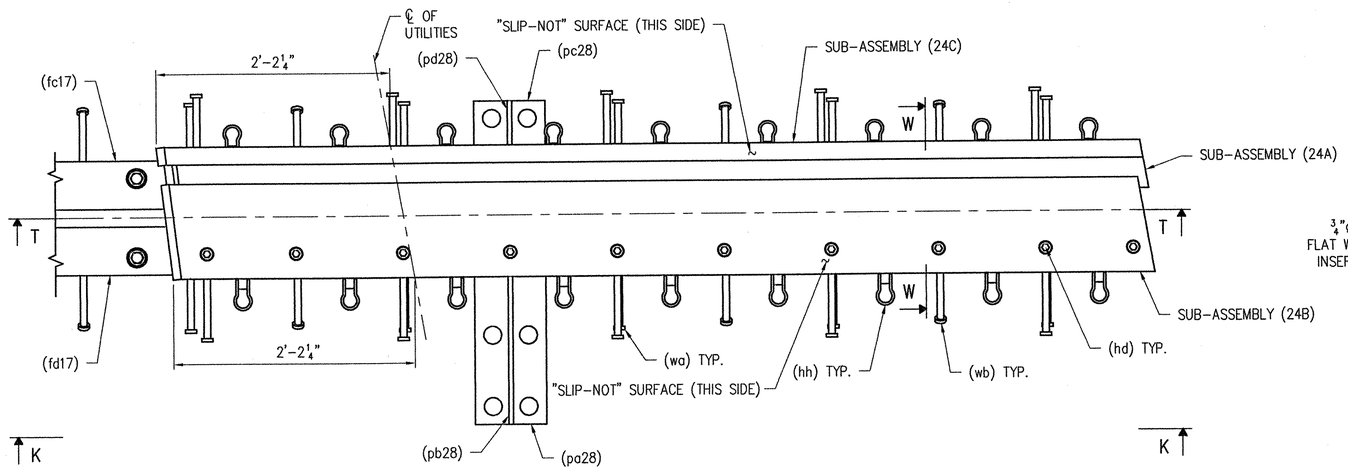

DETAIL "G"

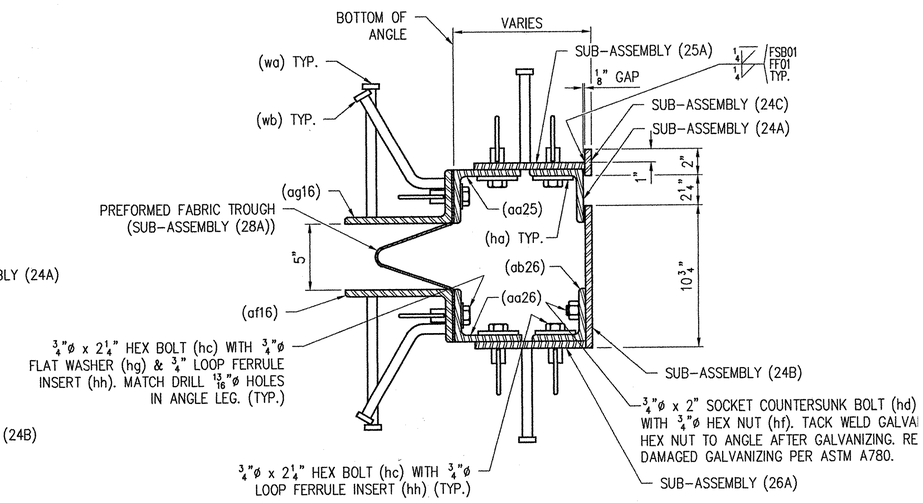

SECTION "W-W"

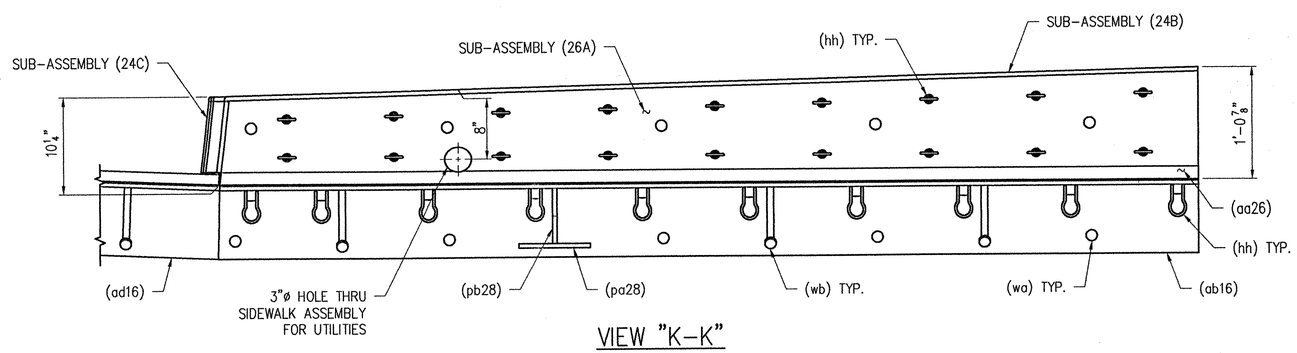

VIEW "K-K"

SEE SHEET NO. 30 FOR GENERAL NOTES.
WORK THIS SHEET WITH SHEET NO. 16, 24, 25, 26 & 27.

REV.	DESCRIPTION	DATE
1	GENERAL REVISION PER APPROVAL.	1/11/02

ANY AND ALL BACKCHARGES WILL BE REJECTED UNLESS WRITTEN CONSENT IS GIVEN BY LE ENGINEERING COMPANY PRIOR TO ANY WORK PERFORMED FOR OUR ACCOUNT. SUCH REJEC MEANS THAT INVOICES WILL NOT BE HONORED OR DEDUCTIONS FROM PAYMENT WILL BE CHARGED B

LEWIS ENGINEERING COMPANY
4201 NOREX DRIVE – CHASKA, MINNESOTA 55318 – (952) 368-3000

PROJECT — ROYALTON / RTE. NO. TH 1, CL 1 BRIDGE NO. 3
STATE PROJECT — AC BRZ 1444(22)
FEDERAL PROJECT —
CUSTOMER — BECK & BELLUCCI, INC.
LOCATION — WINDSOR COUNTY, VT
DESCRIPTION — EXPANSION JOINT DETAILS ABUTMENT NO. 1

Or
W.P. chk'd
Drawn By
Chk'd. By
Date: 12/20

SHOP	
APPROVAL	
DIST.	
CUST.	
FOR PRINTS ISSUED	DATE

RECEIVED
CK'D BY LWS OK'D BY
JAN 2 1 2002
RESUBMIT APPROVED ✓
BY OPW DATE 1/24/02

L.E.C. 23 OF 30 | SHEET NO. 8 OF 15 | Job. No. : 2034.10