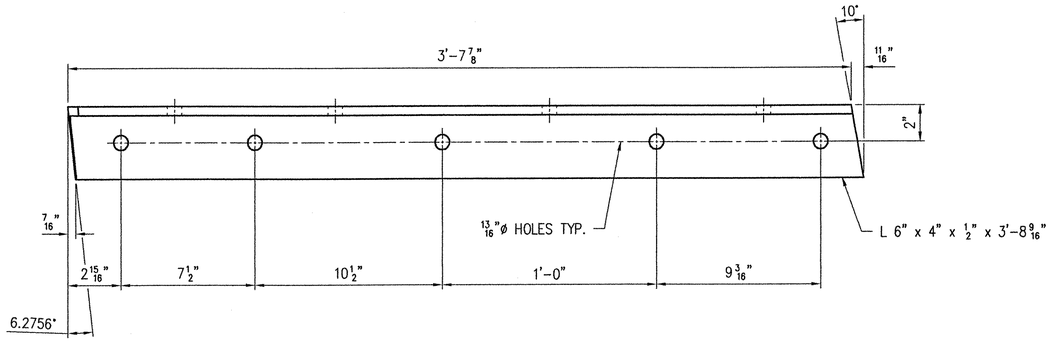

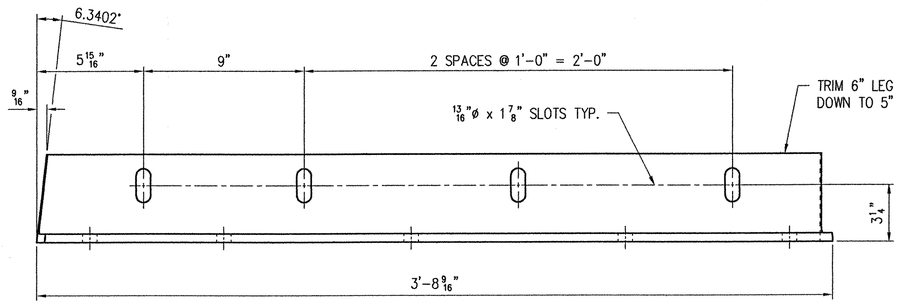

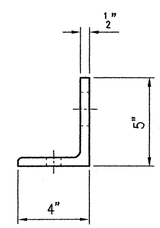

DETAIL (aa20)

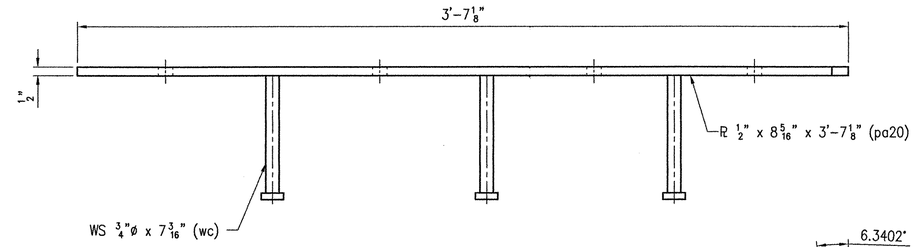

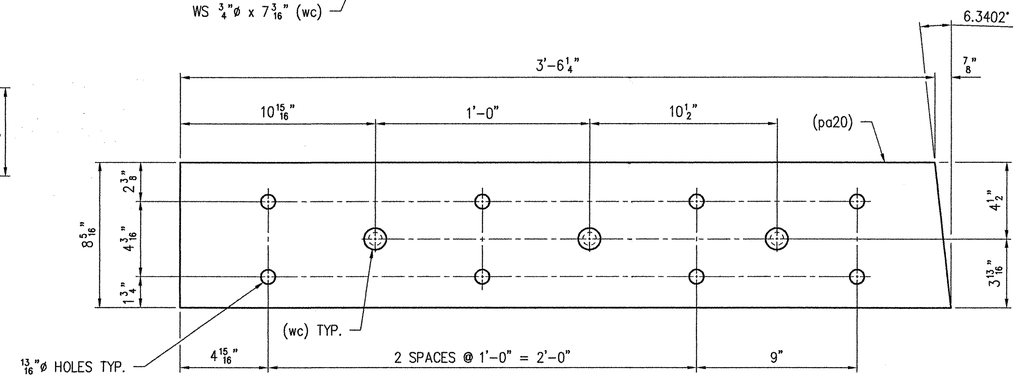

1 – SUB-ASSEMBLY – 20A

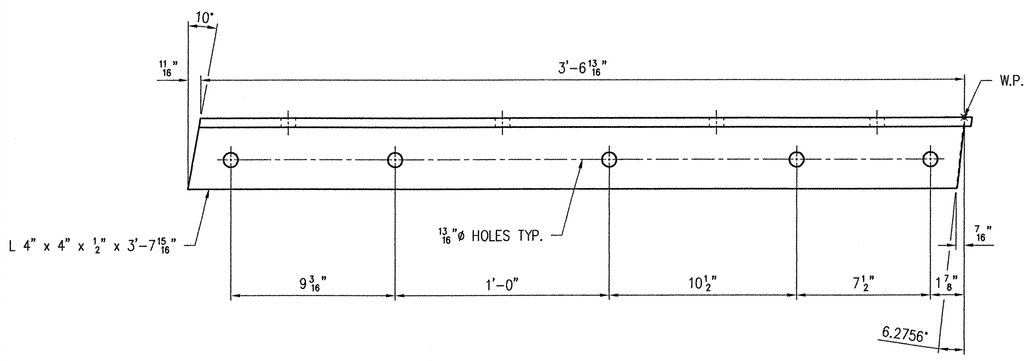

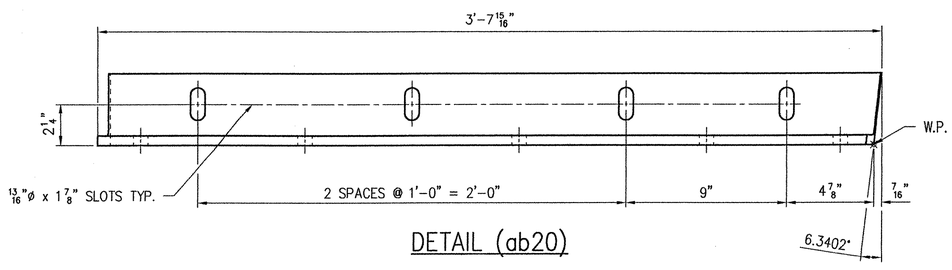

DETAIL (ab20)

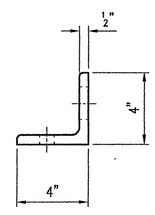

SEE SHEET NO. 30 FOR GENERAL NOTES.
WORK THIS SHEET WITH SHEET NO. 18, 19, 21 & 22.

RECEIVED
CK'D BY (WS) OK'D BY
JAN 2 1 2002
RESUBMIT APPROVED ✓
BY CPW DATE 1/24/02

SHOP	
APPROVAL	
DIST.	
CUST.	
FOR PRINTS ISSUED	DATE

REV.	DESCRIPTION	DATE	INT.

ANY AND ALL BACKCHARGES WILL BE REJECTED UNLESS WRITTEN CONSENT IS GIVEN BY LEWIS ENGINEERING COMPANY PRIOR TO ANY WORK PERFORMED FOR OUR ACCOUNT. SUCH REJECTION MEANS THAT INVOICES WILL NOT BE HONORED OR DEDUCTIONS FROM PAYMENT WILL BE CHARGED BACK.

LEWIS ENGINEERING COMPANY
4201 NOREX DRIVE – CHASKA, MINNESOTA 55318 – (952) 368-3000

PROJECT — ROYALTON / RTE. NO. TH 1, CL 1 BRIDGE NO. 3
STATE PROJECT — AC BRZ 1444(22)
FEDERAL PROJECT —
CUSTOMER — BECK & BELLUCCI, INC.
LOCATION — WINDSOR COUNTY, VT
DESCRIPTION — EXPANSION JOINT DETAILS ABUTMENT NO. 1

W.P. chk'd	Orig.
Drawn By	JMB
Chk'd. By	TSF
Date:	12/20/01

L.E.C. 20 OF 30 | SHEET NO. 5 OF 15 | Job. No. : 2034.1042.1