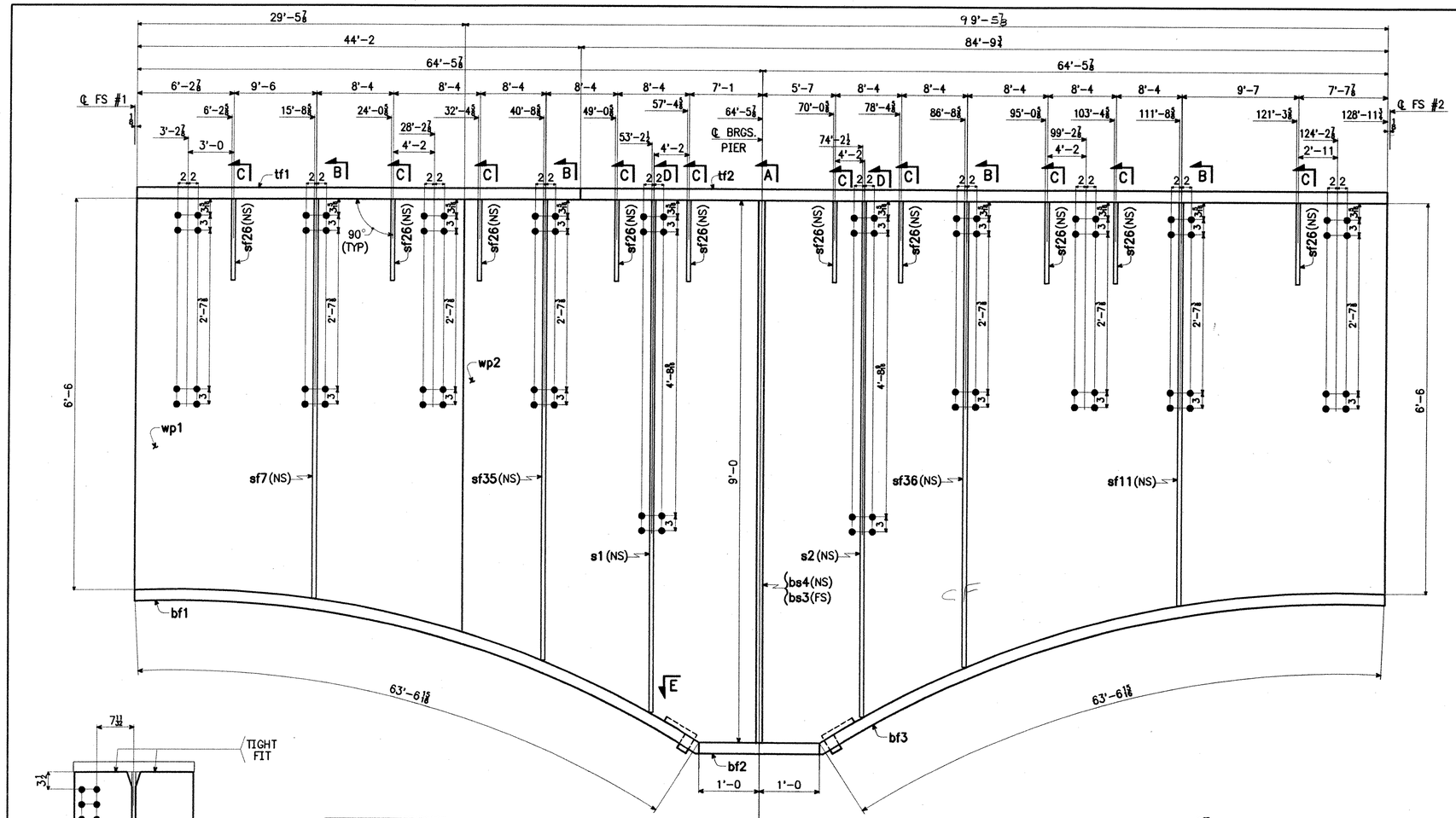

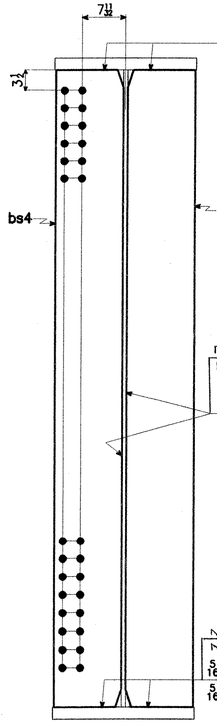

SECT. A

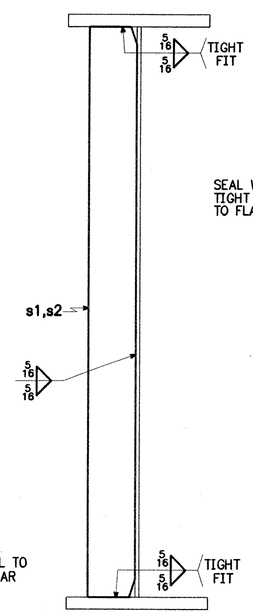

SECT. D

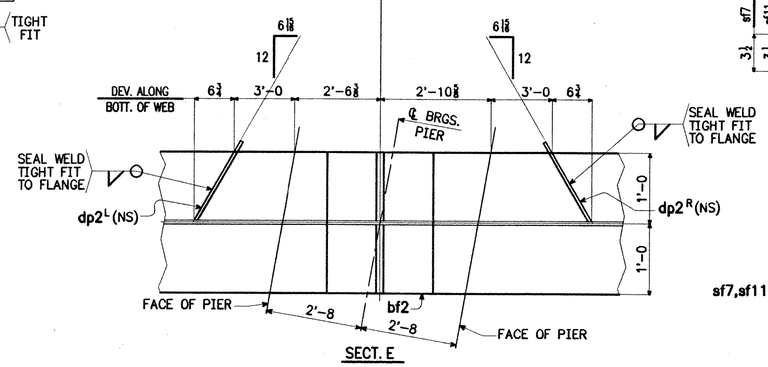

SECT. E

1 ~ GIRDER ~ G1B

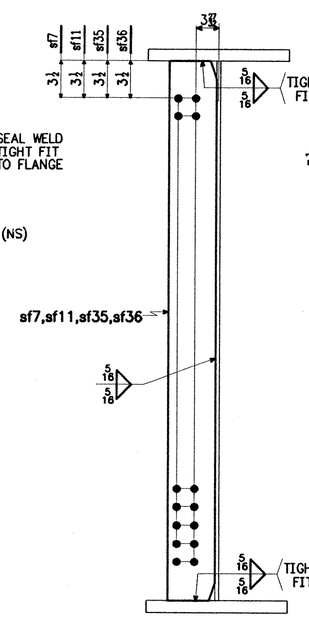

SECT. B

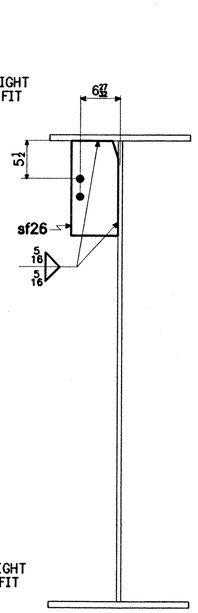

SECT. C

BILL OF MATERIAL

WORK ORDER NO.	DRAWING NO.	REV.
15873	12-16	B

SHIP MARK	NO.	MARK	SHAPE	LENGTH		ITEM NO.	WT.	REMARKS
G1B	1		GIRDER					
	1	tf1	PL 2 1/4 x 24	44'-2	S1/8	2/2	8116	CVN
	1	tf2	PL 2 1/4 x 24	84'-9 3/4	S1/2	2/3	15584	CVN
	1	bf1	PL 2 1/4 x 24	63'-6 13/16	S1/4	2/4	11682	CVN
	1	bf2	PL 2 1/4 x 24	2'-0		2/5	368	CVN
	1	bf3	PL 2 1/4 x 24	63'-6 13/16	S1/6	2/6	11682	CVN
	1	wp1	PL 1 1/16 x 82 3/8	29'-5 7/8	8/6	1/4		CVN
	1	wp2	PL 1 1/16 x 108	99'-5 7/8		1/5	26140	CVN
	1	bs3	PL 1 1/4 x 11 1/2	9'-0	S1/11	3/2	440	M1E
	1	bs4	PL 1 1/4 x 11 1/2	9'-0		3/2	440	M1E
	1	sf11	PL 1/2 x 8	6'-6 11/16	S3/2	3/5	89	
	1	sf36	PL 3/4 x 8	7'-5 1/4	S-3/14	3/16	152	
	1	sf35	PL 3/4 x 8	7'-4 1/4		3/16	150	
	1	sf7	PL 1/2 x 8	6'-6 7/16	S3/2	3/5	89	
	10	sf26	PL 1/2 x 8	1'-4		3/8	181	
	1	s1	PL 3/4 x 8	8'-1 7/8	S3/14	3/17	167	
	1	s2	PL 3/4 x 8	8'-3 1/4		3/17	169	
	1	dp2R	PL 1/4 x 4 1/4	1'-3 5/8	S3/10	3/11	5	
	1	dp2L	PL 1/4 x 4 1/4	1'-3 5/8		3/11	5	
							75459	#

NOTES:

1. FOR GENERAL NOTES, SEE SHT. GN1.
2. FOR GIRDER CAMBER DIAGRAM, SEE DWG. 12-6.
3. FOR GIRDER STANDARD DETAILS, SEE DWG. 12-9.
4. FOR FIELD SPLICE DETAIL, SEE DWG. 12-10.

RECEIVED
CK'D BY LWAS OK'D BY
AUG 27 2001
RESUBMIT APPROVED ✓
BY GPW DATE 8/30/01

STEEL: ASTM	A709-36	A709-50	☒ A709-50W	Unless Noted	
WELDING ELECTRODE:	☒ E70	See Welding Proc.	None		
HOLES:	13/16	☒ 15/16	1 1/16	Unless Noted	As Noted	None
PAINT:	☒ None	Galv. After Fab.	As Noted		
SPECIAL PAINT:					
SPECIAL CLEANING:	☒ Blast Clean SSPC SP10	None			

ITEM NO. 506.55 | BR. NO. 3 | PROJ. NO. BRZ 1444(22)

TITLE: GIRDER ~ G1B

FOR APPROVAL

APPROVED:		
PRINT DIST.		
5	4-7-01	APPR.
ORIG.		FAB.
5	7-13-01	REP'P
5	8-24-01	APP

National Eastern Corporation
Plainville, Connecticut

JOB: T.H. 1 OVER THE WHITE RIVER
ROYALTON, VERMONT

CUSTOMER: BECK & BELLUCCI, INC.

DESIGNER: VERMONT AGENCY OF TRANSPORTATION

			WORK ORDER NO.	DRAWING NO.	REV.
CHECKED	TS	3/01	15873	12-16	B
DRAWN	AV	3/01			

OK