WORK ORDER NO.	DRAWING NO.	REV.
15873	12-9	B

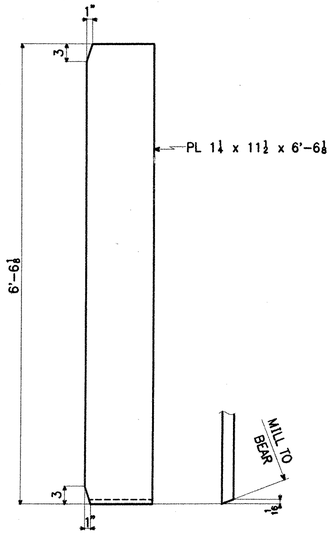

2 ~ BEARING STFS. ~ bs1^{R} 3/2 S1/11

2 ~ BEARING STFS. ~ bs1^{L}

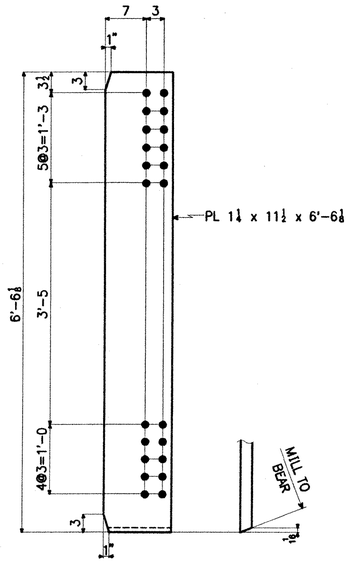

8 ~ BEARING STFS. ~ bs2^{R} 3/2 S1/11

8 ~ BEARING STFS. ~ bs2^{L}

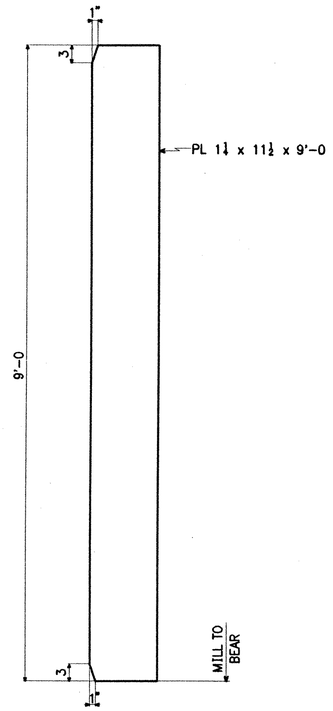

2 ~ BEARING STFS. ~ bs3 3/2 S1/11

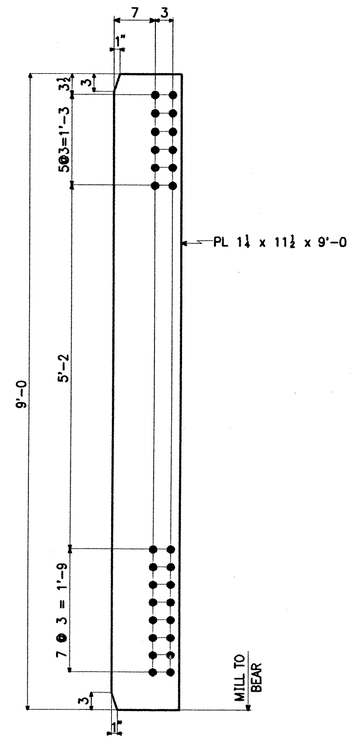

8 ~ BEARING STFS. ~ bs3 3/2 S1/11

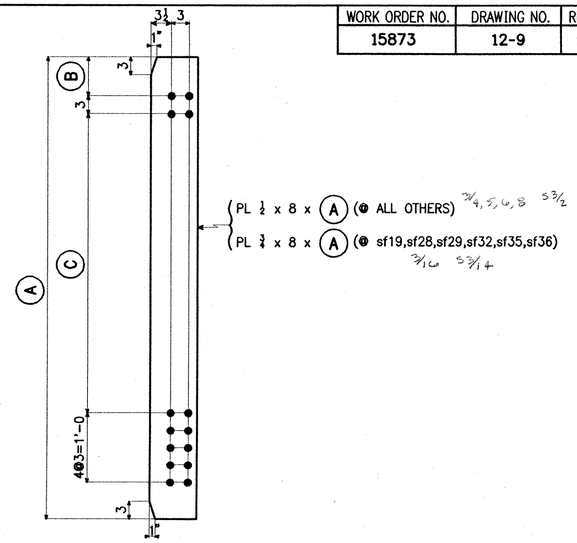

INT. CONN. PLTS.

MARK	No. REQ'D.	A	B	C
sf1	40	6'-6	3½	4'-2¼
sf2	5	6'-6	4½	4'-2¼
sf3	5	6'-6	4¾	4'-2¼
sf4	10	6'-6	5½	4'-2¼
sf5	10	6'-6	6	4'-2¼
sf6	3	6'-6	7¼	4'-2¼
sf7	4	6'-6 7/16	3½	4'-2¼
sf8	7	6'-6	7½	4'-2¼
sf9	1	6'-6 7/16	4¾	4'-2¼
sf10	1	6'-6 7/16	5½	4'-2¼
sf11	4	6'-6 11/16	3½	4'-2¼
sf12	1	6'-6 7/16	6	4'-2¼
sf13	1	6'-6 7/16	7	5'-0
sf14	2	7'-4¼	3½	5'-0
sf15	1	6'-6 11/16	5½	5'-0

MARK	No. REQ'D.	A	B	C
sf16	1	6'-6 11/16	6	5'-0
sf17	1	6'-6 11/16	7	5'-0
sf18	2	7'-5¼	3½	5'-0
sf19	1	7'-4¼	4¾	5'-0
sf20	1	7'-4¼	5½	5'-0
sf27	1	7'-4¼	6	5'-0
sf28	1	7'-4¼	7	5'-0
sf29	1	7'-5¼	4½	5'-0
sf30	1	7'-5¼	5½	5'-0
sf31	1	7'-5¼	6	5'-0
sf32	1	7'-5¼	7	5'-0
sf33	1	6'-6 11/16	4½	5'-0
sf35	2	7'-4¼	3½	5'-0
sf36	2	7'-5¼	3½	5'-0

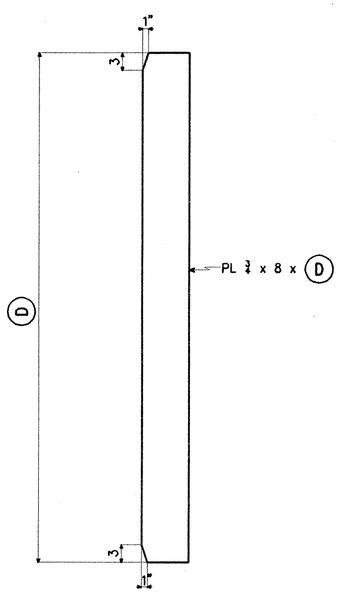

INT. STIFFS.

MARK	No. REQ'D.	D
s1	5	8'-1 7/8
s2	5	8'-3¼
s3	1	7'-4¼
s4	1	7'-5¼

3/17 S3/14

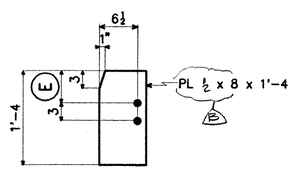

UTILITY CONN. PLTS.

MARK	No. REQ'D.	E
sf21	34	8
sf22	17	6½
sf23	17	6¾
sf24	10	9¼
sf25	14	9½
sf26	102	5½
sf34	10	9

3/8 S3/12

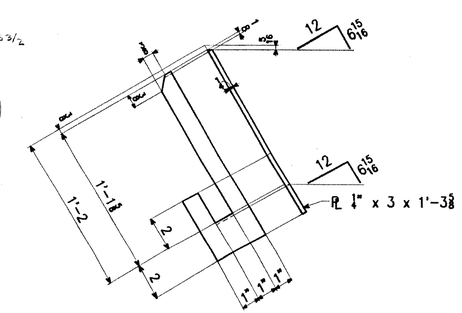

2 ~ dp1^{R} 3/11 S3/10

2 ~ dp1^{L}

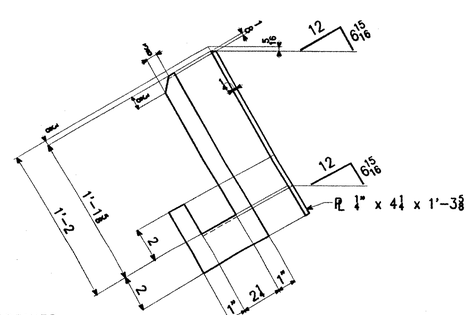

2 ~ dp2^{R} 3/11 S3/10

2 ~ dp2^{L}

RECEIVED
CK'D BY WAS OK'D BY
AUG 27 2001
RESUBMIT APPROVED As Noted
BY OPW DATE 8/30/01

STEEL: ASTM	A709-36	A709-50	☒ A709-50W	Unless Noted
WELDING ELECTRODE:	☒ E70	See Welding Proc.	None	
HOLES:	13/16	☒ 15/16	1 1/16	Unless Noted / As Noted / None
PAINT:	☒ None	Galv. After Fab.	As Noted	
SPECIAL PAINT:				
SPECIAL CLEANING:	☒ Blast Clean SSPC SP8 10	None		

ITEM NO. 506.55 | BR. NO. 3 | PROJ. NO. BRZ 1444(22)

TITLE: GIRDER STANDARD PARTS FOR APPROVAL

APPROVED:		
PRINT DIST.		
5	4-7-01	APPR.
ORIG.		FAB.
5	7-13-01	APP
5	8-24-01	APP

National Eastern Corporation
Plainville, Connecticut

JOB: T.H. 1 OVER THE WHITE RIVER
ROYALTON, VERMONT

CUSTOMER: BECK & BELLUCCI, INC.

DESIGNER: VERMONT AGENCY OF TRANSPORTATION

CHECKED	TS	3/01
DRAWN	AV	3/01

WORK ORDER NO.	DRAWING NO.	REV.
15873	12-9	B

OK