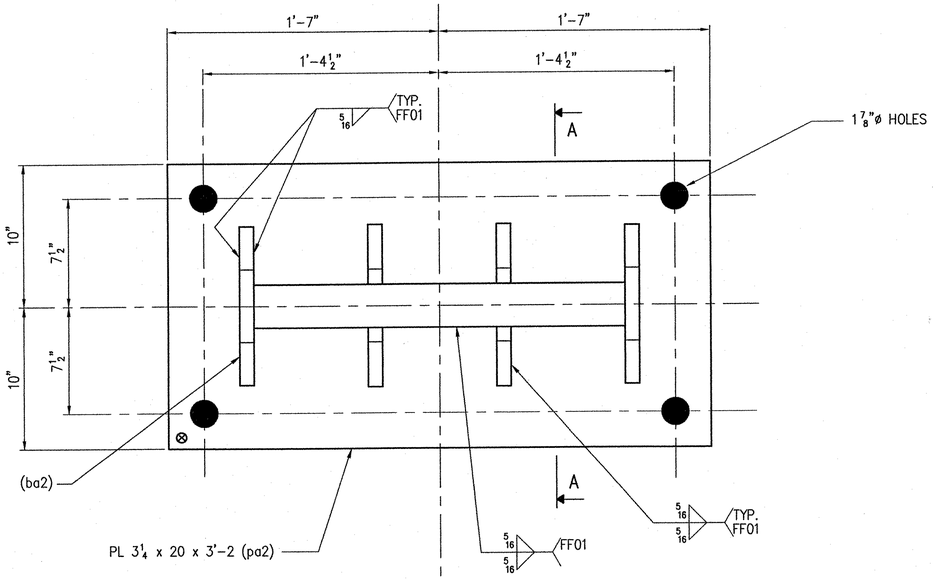

SHOP NOTE :
⊗ – INDICATES LOCATION OF SHIPPING PIECE MARK

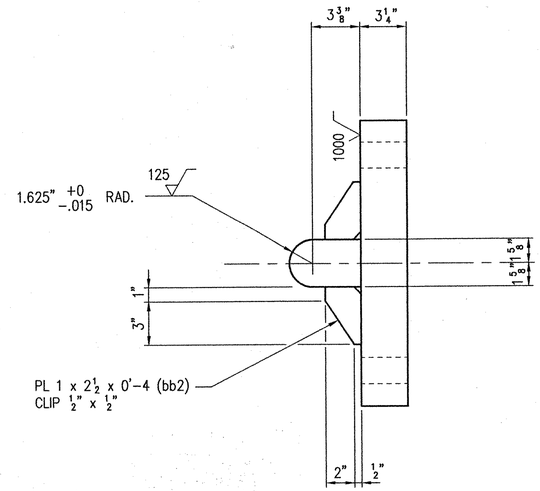

SECTION A–A

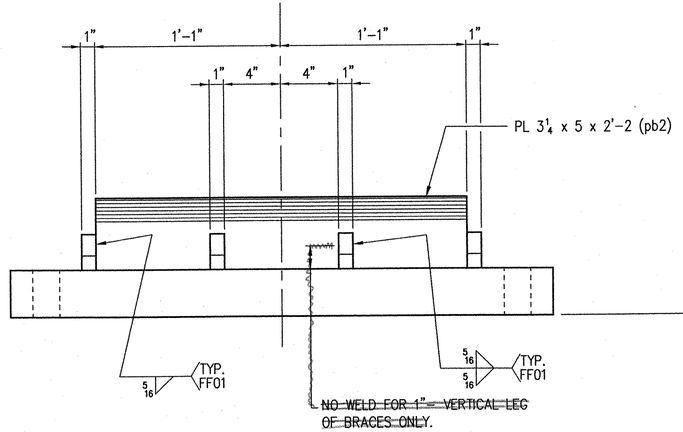

5 – MASONRY PLATE ASSEMBLY – 2A

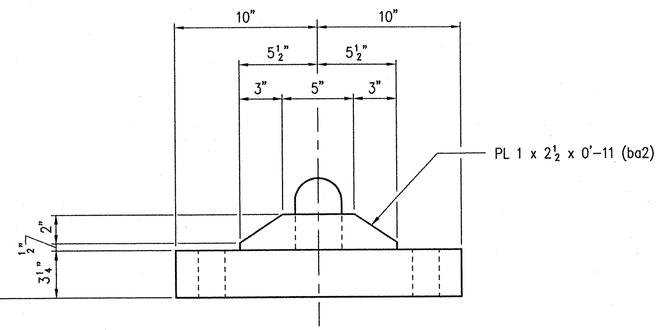

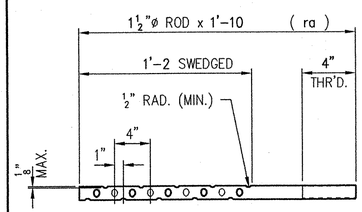

20 – ANCHOR RODS – 2B

ONE DEFORMATION WITHIN EACH INCH, DEFORMATIONS ARE 90° OUT OF PHASE WITH ADJACENT DEFORMATIONS.

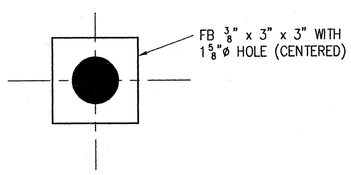

20 – PLATE WASHERS – 2C

GENERAL NOTES: SEE SHT. GN1.

LINE	NO. REQ'D.	DESCRIPTION	LENGTH	MK	REMARKS	PART NO.
1	5	MASONRY PLATE ASSEMBLY		2A	METALIZE/ PAINT	
2	5	PL 3¼ x 20 A709 GR. 50	3'-2	pa2	MACH./ ADD MAT'L. FOR MACH.	
3	5	PL 3¼ x 5 A709 GR. 50	2'-2	pb2	MACH./ ADD MAT'L. FOR MACH.	
4	10	PL 1 x 2½ A709 GR. 50	0'-11	ba2	SHAPE CUT	19-60
5	20	PL 1 x 2½ A709 GR. 50	0'-4	bb2	SHAPE CUT	19-60
6						
7						
8	20	ANCHOR RODS		2B	HDG	
9	20	RB 1½" A36	1'-10	2B	SWEDGE	
10						
11	20	PLATE WASHERS		2C	HDG	
12	20	FB ⅜ x 3 A36	0'-3	2C		
13						
14						
15	21	HN 1½"ø HVY. A563A HDG		2D	20	
16						
17						
18						
19						
20						
21						
22						
23						
24						
25						
26						
27						
28						
29						
30						
31						
32						
33						
34						
35						
36						
37						
38						
39						
40						
41						
42						
43						
44						
45						
46						
47						
48						
49						
50						
51						
52						
53						
54						
55						
56						
57						
58						
59						
60						

REV.	DESCRIPTION	DATE	INT.

RECEIVED
CKD BY LWSS CKD BY RSK
MAR 12 2001
ACCEPTED APPROVED As Noted
BY CPW DATE 3/29/01

ANY AND ALL BACKCHARGES WILL BE REJECTED UNLESS WRITTEN CONSENT IS GIVEN BY LEWIS ENGINEERING COMPANY PRIOR TO ANY WORK PERFORMED FOR OUR ACCOUNT. SUCH REJECTION MEANS THAT INVOICES WILL NOT BE HONORED OR DEDUCTIONS FROM PAYMENT WILL BE CHARGED BACK.

LEWIS ENGINEERING COMPANY
4201 NOREX DRIVE – CHASKA, MINNESOTA 55318 – (612) 368-3000

PROJECT – ROYALTON/ RTE. NO. TH 1, CL 1 BRIDGE NO. 3
STATE PROJECT – AC BRZ 1444(22)
FEDERAL PROJECT –
CUSTOMER – BECK & BELLUCCI, INC.
LOCATION – WINDSOR COUNTY, VT
DESCRIPTION – PIER FIXED BEARING DETAILS

ORIG.
W.P. chk'd JDK
Drawn By TSF
Chk'd. By NY
Date: 2/01

SHEET NO. 2 OF 2
Job. No. : 2034.1121.1

SHOP	
APPROVAL	
DIST.	
CUST.	
FOR PRINTS ISSUED	DATE