NETC TYPICAL DETAILS

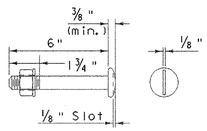

3/4 " Ø M164 (TYPE I) ROUND HEAD BOLT

[with washer & prevailing torque type lock nut]
[See note No. 9]
Only full diameter body bolts will be allowed

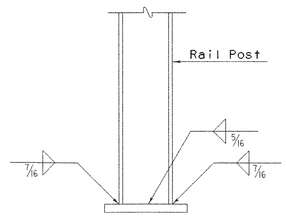

BASE WELD DETAIL

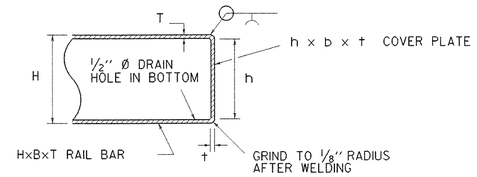

STEEL BEAM	COVER PLATE
8"x4"x5/16"	7 1/2"x3 1/2"x1/4"
4"x4"x1/4"	3 5/8"x3 5/8"x1/4"
8"x2"x1/4"	7 5/8"x1 5/8"x1/4"
4"x2"x1/4"	3 5/8"x1 5/8"x1/4"
2.5"x2.5"x1/4"	2 1/8"x2 1/8"x1/4"

END COVER PLATE DETAIL

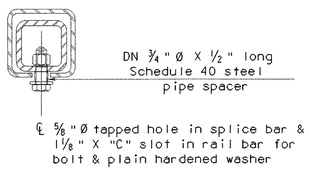

EXPANSION JOINT SECTION

For details not shown, see
"Rail Bar Splice Section"

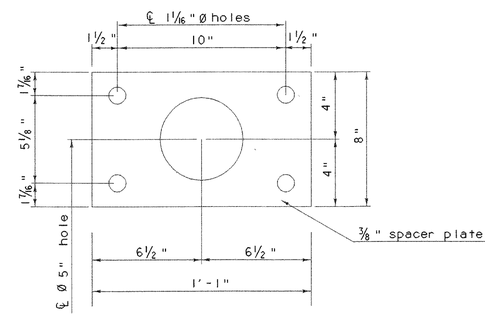

SPACER PLATE

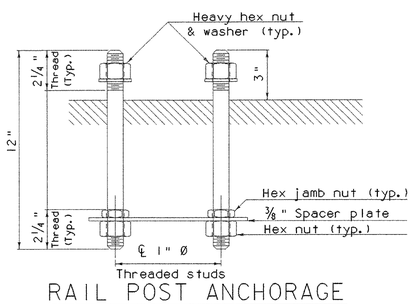

RAIL POST ANCHORAGE

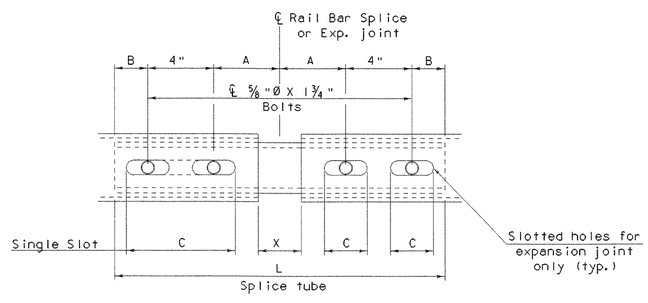

RAIL BAR SPLICE & RAIL EXP. JOINT DETAIL

[Bottom View]

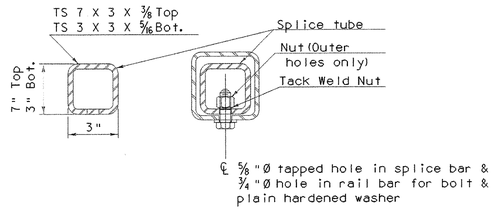

RAIL BAR SPLICE SECTION

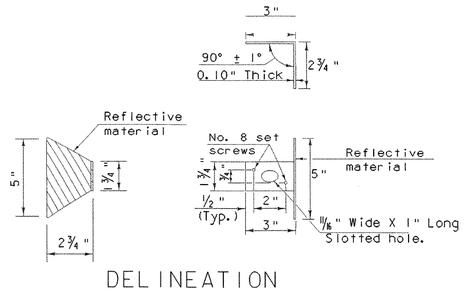

DELINEATION DEVICE DETAILS

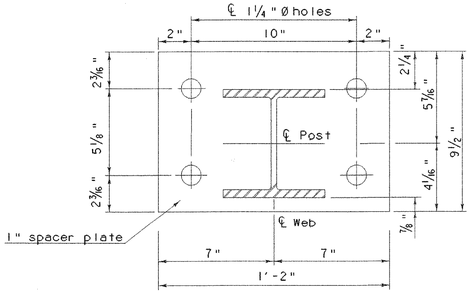

POST & BASE PLATE

NETC 2 RAIL AND 4 RAIL NOTES

1. All work and materials shall conform to the provisions of Section 525 - Railings of the Standard Specifications for Construction.

2. Tubing and posts shall meet the requirements of Section 732 - Railing materials of the Standard Specifications for Construction.

3. All exposed cut or sheared edges shall be rounded to a 1/16" radius and be free of burrs.

4. Rail posts shall be set normal to grade.

5. Sections of rail bar shall be attached to a minimum of two [2] rail posts and preferably to at least four [4] posts.

6. Rail bar expansion joints shall be provided in any rail bay spanning a superstructure expansion joint. Expansion joint width shall be "X" at 45 °F and will be adjusted in the field by the Engineer.

7. All railing parts shall be galvanized after fabrication in accordance with subsection 506.15, as modified by the special provisions.

8. Rail posts anchoring nuts shall be tightened to a snug fit and given an additional 1/8 turn.

9. Rail bars shall be attached using 3/4" full diameter body AASHTO M164 (Type I) round head bolts inserted through the face of the bar. Holes in posts shall be 1/16" larger than the bolt size.

10. If there is a conflict between these Standard Details and the Design Drawings, the requirements of the Design drawings shall be followed.

11. Any bending of rail shall be by shop procedure only.

12. The fabricator shall submit shop drawings including welding procedures to the Structures Section for approval in accordance with the provision of 506.04, shop drawings. All welding shall conform with section 506.10.

13. The drop-weight tear test in section 732 shall not apply to the structural tubing on this standard.

14. The gaps between the ends of pedestrian rail bars and granite facing of towers shall be 4 " maximum, 2 " minimum @ 45°

15. Pedestrian railbars shall be spliced at posts, and do not require splice tubes.

16. Holes in rails for rail bar attachment may be field drilled. The holes shall be coated with an approved zinc-rich paint.

MATERIALS

Rail bars.....ASTM A500, Grade B or ASTM A501
Rail posts.....ASTM A709/A709M, Grade 50
All other shapes & plates.....ASTM A709/A709M, Grade 36
Anchor studs.....ASTM A449
All other bolts [unless noted].....AASHTO M164, TYPE I

Nuts for AASHTO M164 bolts shall comply with AASHTO M291. Nuts for anchor studs shall comply with ASTM A563.

Washers shall comply with AASHTO M293 (ASTM F436) specification.

1/8 " pad shall comply with standard specification subsection 731.01 or 731.02.

Set screws for delineation devices shall conform to ASTM Specification F880, condition CW, Alloy Type 304.

SPLICE & EXPANSION JOINT TABLE

T	A	B	C	L	X
Splice	4"	2"	--	20"	3/4"
≤4"	4"	2"	2 1/2"	20"	2 1/2"

T = Total Movement * = Single Slot

PROJECT NAME:
PROJECT NUMBER: ROYALTON BRZ 1444 (22)

FILE NAME: 89j099/structures/sj099rail.dgn
IPARM NAME: sj099netcl.i
PROJECT LEADER: C.P. WILLIAMS
DESIGNED BY: W.B. SYMONDS
NETC TYPICAL DETAILS

PLOT DATE: 25-SEP-2000
DRAWN BY: P.R. ROWE
CHECKED BY: W.B. SYMONDS
SHEET 72 OF 118