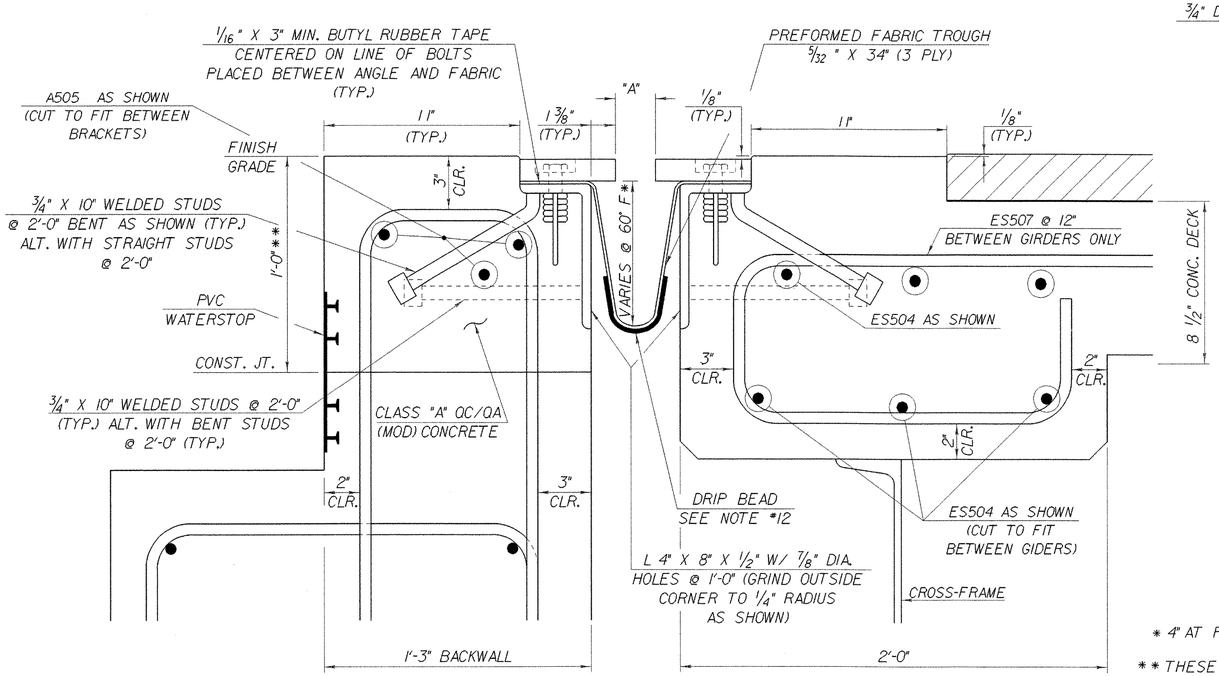


## TYPICAL SECTION BETWEEN GIRDERS

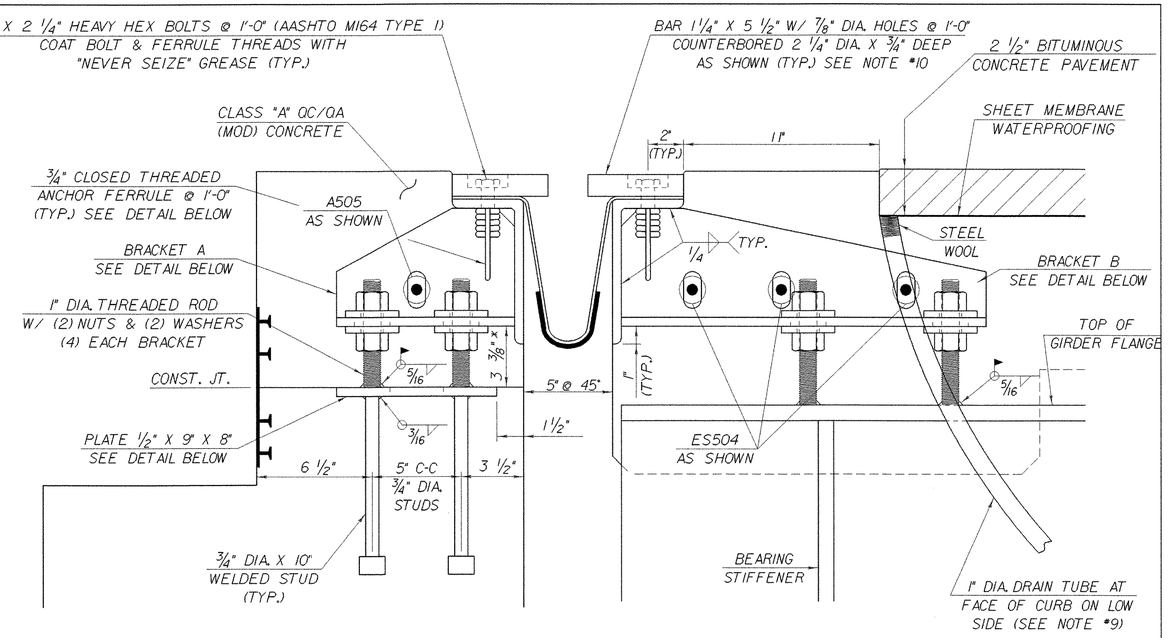


## TYPICAL SECTION AT GIRDERS

* 4" AT FASCIA TO 12" AT DOWNSPOUT

** THESE DIMENSIONS ARE THEORETICAL AND MAY CHANGE DEPENDING UPON THE OUTCOME OF THE BEAM PROFILES.

1. DETAILS ON THIS SHEET ARE FOR ITEM 516.10 "BRIDGE EXPANSION JOINT". THE UNIT BID PRICE FOR THIS ITEM SHALL INCLUDE THE MATERIAL, FABRICATION AND INSTALLATION OF THE CURB AND SIDEWALK PLATES.
2. PREFORMED FABRIC MATERIAL SHALL BE CONTINUOUS AND SHALL CONFORM TO SUBSECTION 707.07.
3. BUTYL RUBBER TAPE SHALL CONFORM TO AASHTO SPECIFICATION M-198, TYPE 11.
4. THE FINAL FINISH OF THE EXPANSION DEVICE SHALL BE COVERED DURING THE PLACING OF BRIDGE DECK CONCRETE.
5. ALL STEEL COMPONENTS SHALL BE AASHTO M270 GRADE 36 GALVANIZED OR METALIZED AS PER SUBSECTION 516.02 AS MODIFIED BY GENERAL SPECIAL PROVISIONS UNLESS OTHERWISE SPECIFIED. THE TOP PLATE FOR THE CURB AND SIDEWALK PLATES SHALL BE SLIP-NOT OR EQUIVALENT ASTM A-36 STEEL.
6. THE ITEM "BRIDGE EXPANSION JOINT" SHALL INCLUDE THE FABRICATION AND ERECTION OF THE COMPLETE JOINT ASSEMBLY INCLUDING ALL STEEL PLATES, BRACKETS, ANGLES, WELDED STUDS OR RODS, PREFORMED FABRIC DRAIN TROUGH MATERIAL AND PLASTIC DRAIN TUBES, BUTYL RUBBER TAPE AND ANY OTHER MISCELLANEOUS MATERIAL NECESSARY TO INSTALL JOINT.
7. THE 4" X 8" X 1/2" ANGLES SHALL BE FURNISHED AS ONE CONTINUOUS PIECE. THE 1 1/4" X 5 1/2" BARS EACH SIDE OF THE JOINT SHALL BE PROVIDED IN TWO EQUAL LENGTHS.
8. COAT CONCRETE CONTACT SURFACES WITH EPOXY BONDING COMPOUND MEETING THE REQUIREMENTS OF SUBSECTION 719.02. PAYMENT SHALL BE INCLUDED IN THE UNIT PRICE BID FOR ITEM 516.10 "BRIDGE EXPANSION JOINT".
9. A 1" DIAMETER PLASTIC DRAIN TUBE (PER STD. SPEC. 740.01) SHALL BE INSTALLED AS SHOWN AT THE FACE OF CURB. THE UPPER END IS TO BE PLUGGED WITH STEEL WOOL AND THE LOWER END IS TO EXTEND BELOW THE BOTTOM OF THE ADJACENT GIRDER. THE DRAIN TUBES SHALL BE FASTENED TO THE GIRDERS USING A METHOD APPROVED BY THE ENGINEER.
10. FILL COUNTERBORED HOLES WITH HOT POURED JOINT SEALER (STD. SPEC. 707.04 AS MODIFIED BY THE GENERAL SPECIAL PROVISIONS) AFTER BOLT INSTALLATION. PAYMENT FOR THE WORK SHALL BE SUBSIDIARY TO ITEM 516.10.
11. PAYMENT FOR WATERSTOP SHALL BE SUBSIDIARY TO CONCRETE PAY ITEM.
12. A DRIP BEAD OF 1/4" X 7" STRIP OF PREFORMED MATERIAL SHALL BE CEMENTED TO THE BOTTOM OF THE FABRIC TROUGH USING AN ADHESIVE APPROVED BY THE MANUFACTURER. THE DRIP BEAD SHALL BE APPLIED 1" FROM THE DOWNSPOUT END OF THE TROUGH.
13. FABRIC TROUGH SHALL BE THOROUGHLY CLEANED AND FLUSHED AFTER PAVING OPERATION.
14. THE EXPANSION JOINT SHALL BE SHOP ASSEMBLED AND SHIPPED AS ONE UNIT.

| TEMP | "A" DIST |
|---|---|
| 0° F | 2 15/16" |
| 15° F | 2 11/16" |
| 30° F | 2 1/2" |
| 45° F | 2 1/4" |
| 60° F | 2" |
| 75° F | 1 13/16" |
| 90° F | 1 9/16" |
| 105° F | 1 3/8" |

"A" IS THE SETTING BEFORE DECK HAS BEEN PLACED.

## ANCHOR FERRULE DETAIL

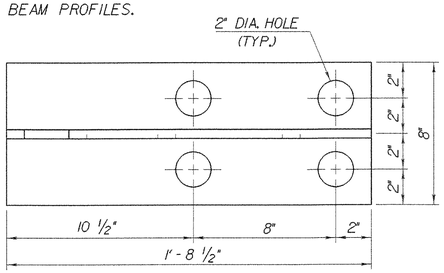


## BRACKET B PLAN

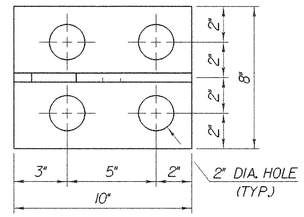


## BRACKET A PLAN

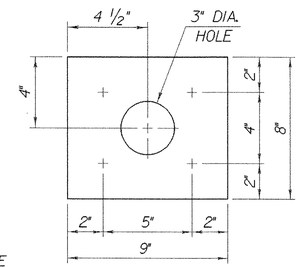


## PLATE PLAN

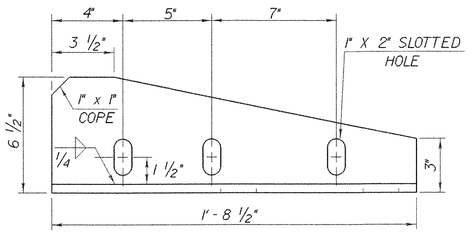


## BRACKET B ELEVATION

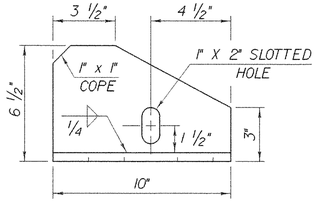


## BRACKET A ELEVATION

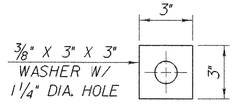


## WASHER FOR BRACKET

ALL PLATES 1/2"

ALL DETAILS THIS SHEET
SCALE: 3" = 1'-0" (NORMAL TO ℄ BEARING)
1 9 6 3 0 1

| | |
|---|---|
| PROJECT NAME: | |
| PROJECT NUMBER: | ROYALTON BRZ 1444 (22) |
| FILE NAME: 89j099/structures/sj099joint.dgn | PLOT DATE: 25-SEP-2000 |
| IPARM NAME: sj099expl.i | DRAWN BY: K. M. HIGGINS |
| PROJECT LEADER: C.P. WILLIAMS | CHECKED BY: W.B. SYMONDS |
| DESIGNED BY: W.B. SYMONDS | SHEET 42 OF 118 |
| EXPANSION JOINT DETAILS | |