NOTE: THE DETAILS SHOWN ARE FOR ABUTMENT #1 EXPANSION BEARING. THESE DETAILS SHALL APPLY FOR ABUTMENT #2 BEARING WITH DIMENSIONS OPPOSITE HAND

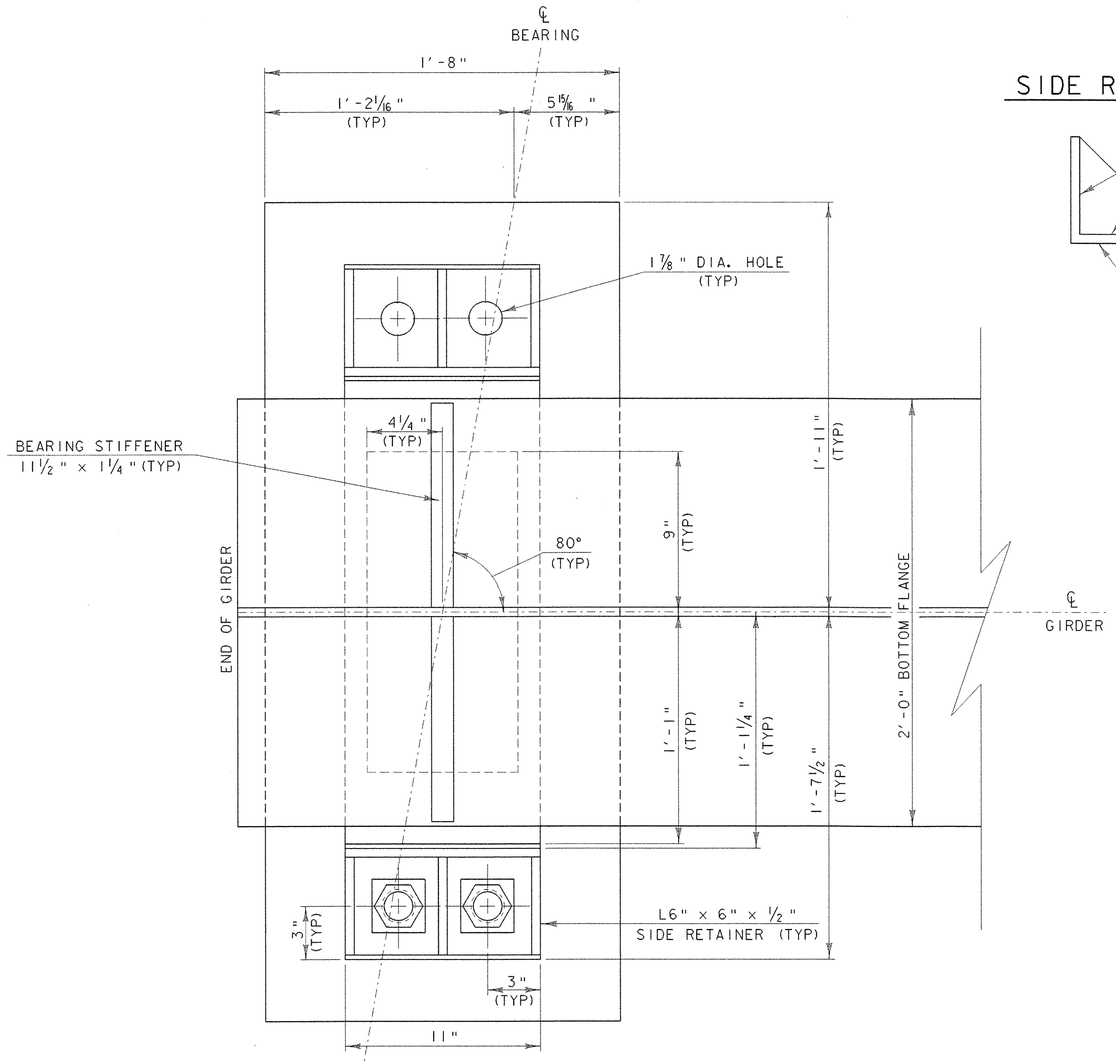

PLAN VIEW

SIDE RETAINER

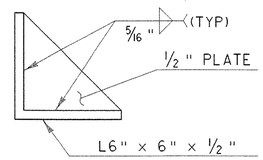

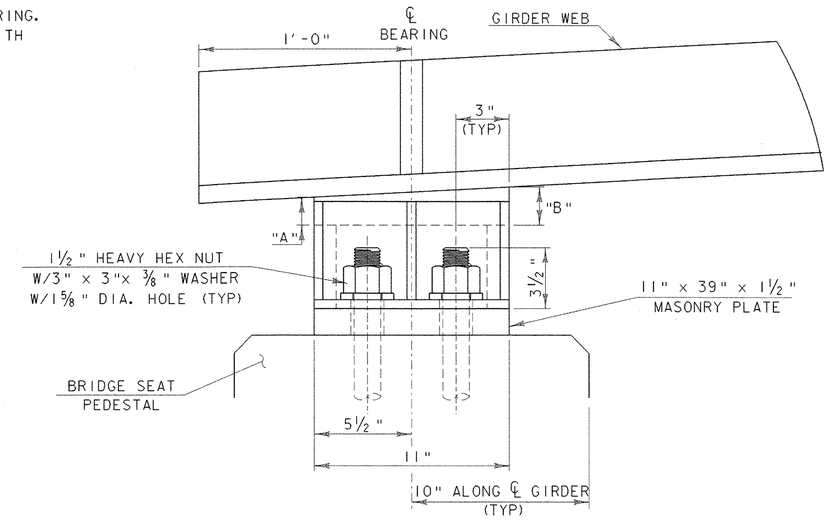

SIDE ELEVATION

* BEVEL PLATE THICKNESS		
	"A"	"B"
ABUTMENT #1	1 1/2"	1 13/16"
ABUTMENT #2	1 1/2"	1 5/8"

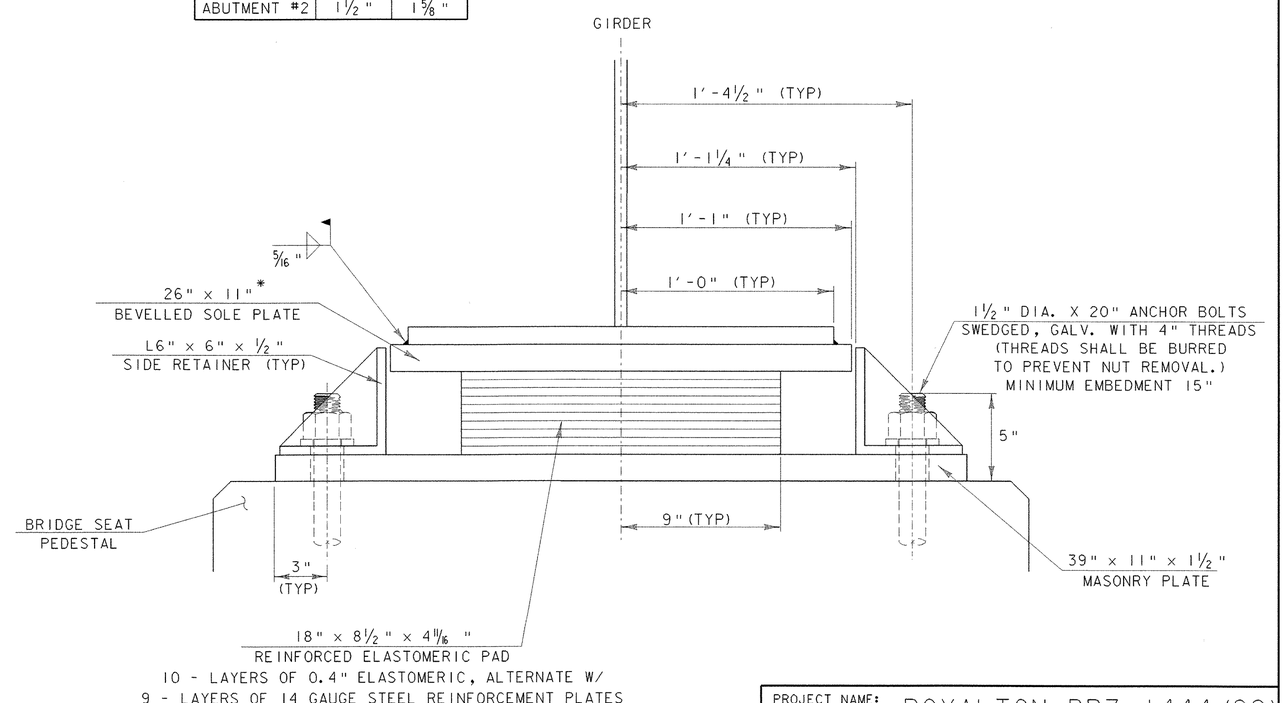

FRONT ELEVATION

SCALE 3" = 1'-0

9 6 3 0

SEE SHEET 41 FOR BEARING NOTES

PROJECT NAME:
PROJECT NUMBER: ROYALTON BRZ 1444 (22)

FILE NAME: 89j099/structures/sj099bearing.dgn
IPARM NAME: sj099abutbearing.i
PROJECT LEADER: C.P. WILLIAMS
DESIGNED BY: W.B. SYMONDS
EXPANSION BEARING DETAILS

PLOT DATE: 25-SEP-2000
DRAWN BY: P.R. ROWE
CHECKED BY: W.B. SYMONDS
SHEET 39 OF 118