ITEM DETAIL AND DRAINAGE SHEET

STATE OF VERMONT
AGENCY OF TRANSPORTATION

DRAINAGE STRUCTURES

STA.	STA.	POSITION	ASKEW	TYPE IN/OUT	DITCH IN	DITCH OUT	PIPE ARCH S IN	PIPE ARCH R IN	PIPE ARCH L FT	PIPE D IN	PIPE L FT	ALLOWABLE OPTIONS PCCSP TH	CAAP TH	RCP CL	CSP TH	CPEP SL	PCCSP PI TH	PIPE ELBOW NO-DEG	ES EA	CB	DEPTH DI	CONC CL B CY	REIN STEEL LBS	DI GRATE TYPE	CHAN ELEV	CRM CY	TR EXCAV EARTH CY	TR EXCAV ROCK CY	COMM EXC CY	UNC CHAN EXC CY	STRUC EXCAV CY	GRAN BKF STRUC CY	GRAN BORR CY	EROS MATT SY	STONE FILL CY	STONE FILL TYPE	MRKR POSTS LT	MRKR POSTS RT	REMARKS
3+92	4+24	RT-LT		HDWL	X	X				30	52	.109	.105	V		X						11	110				70					48			4	I	I	I	EXCAVATION OF HEADWALLS TO BE PAID AS TRENCH EXCAVATION
3+94	4+30	RT-LT		ES		X				15	36			IV	.079	X			1								14					12						2		SHARED CONCRETE HEADWALL OUTLET
																																							REMOVAL OF EXISTING 15" DRIVE CULVERT TO BE PAID AS TRENCH EXCAVATION
2+78	3+92	RT-RT																									56								56	I				CONSTRUCT DITCH
TOTALS										30 15	52 36								1			11	110				140					60			60		I	3		

GUARD RAIL

STA.	STA.	LT.	RT.	END TREATMENT

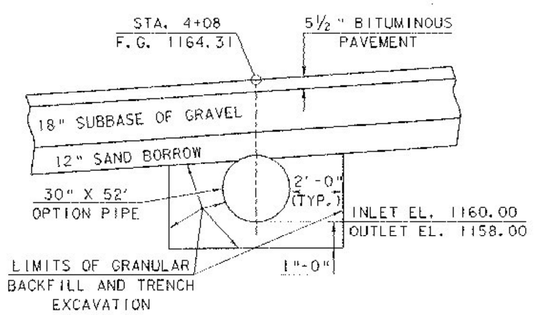

TYPICAL SECTION OF 30" PIPE AT CENTERLINE OF T.H. 3

SCALE: ⅜" = 1'-0"

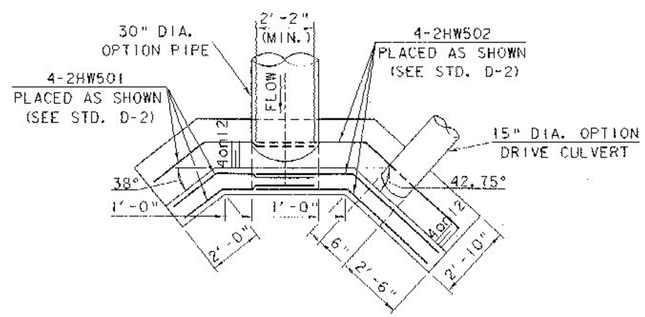

OUTLET HEADWALL PLAN

SCALE: ⅜" = 1'-0"

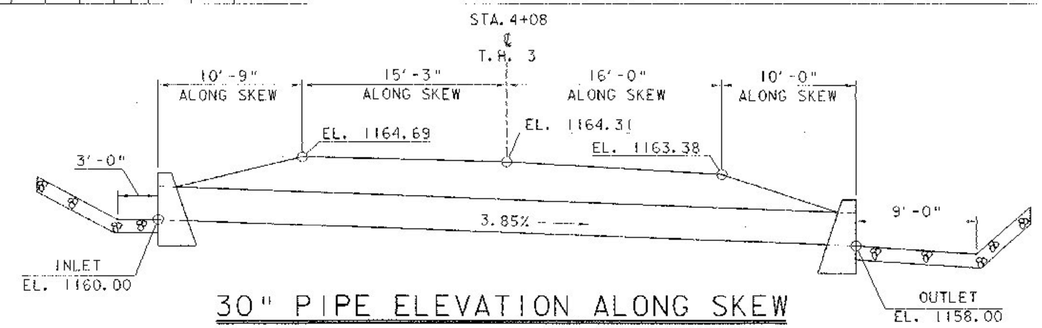

30" PIPE ELEVATION ALONG SKEW

SCALE: 3/16" = 1'-0"

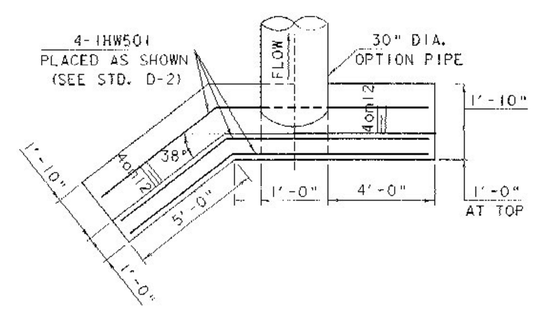

INLET HEADWALL PLAN

SCALE: ⅜" = 1'-0"

UNDERDRAIN

STA.	STA.	TYPE	POS.	D	L	TRENCH E	TRENCH H	GRAN BKF	FB	MKR PST
2+56	2+87	C	LT	6	42	15				1
2+87	4+00	U	LT	6	113	35			1	1
TOTALS		C U		6 6	42 113	50			1	2

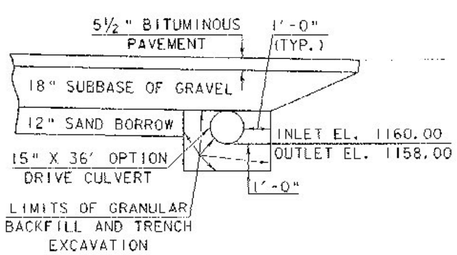

TYPICAL SECTION OF 15" PIPE

SCALE: ⅜" = 1'-0"

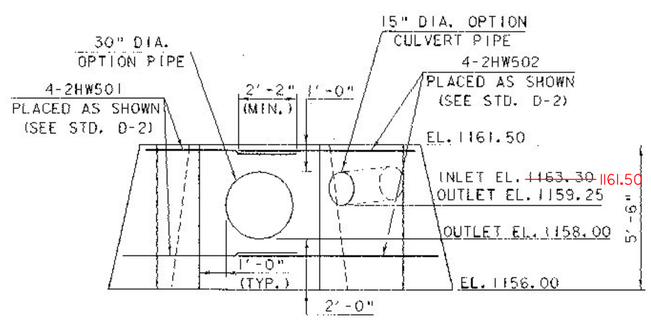

ELEVATION

SCALE: ⅜" = 1'-0"

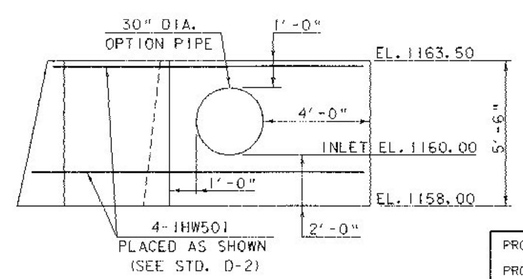

ELEVATION

SCALE: ⅜" = 1'-0"

PROJECT NAME: HUNTINGTON
PROJECT NUMBER: BRZ 1442 (18)

FILE NAME: 89J092\structures\sj092drn.i
PROJECT MANAGER: R.R.WHITCOMB
DESIGNED BY: T.A.SUMNER
DRAINAGE SHEET

PLOT DATE: 17-NOV-2000
DRAWN BY: K.CHISHOLM
CHECKED BY: T.A.SUMNER
SHEET 6 OF 33