ABM INFO		SHIP	BILL OF MATERIAL					JOB NO.	DRAWING NO.	REV.
								519	5	
PAGE	LINE	MARK	QTY	MARK	MATERIAL	LENGTH m	LENGTH mm	REMARKS	WT	PROCUREMENT NOTES
					END DIAPHRAGMS					
2	G	5D1	4		W 920x201	2	220	NO PRINT	1785 kg 3935 lbs	
2	G	5D1P	4		W 920x201	2	220	PRINTED	1785 kg 3935 lbs	
		5CF1	20		CROSSFRAMES			NO PRINT	2847 kg 6276 lbs	
2	K		40	a5	L 89x89x5.5	1	980		958 kg 2100 lbs	
2	L		40	b5	L 89x89x5.5	1	077		543 kg 1197 lbs	
2	M		40	pa5	PL 13x340	0	415		576 kg 1270 lbs	
2	N		40	pb5	PL 13x165	0	415		280 kg 616 lbs	
2	P		20	pc5	PL 13x345	0	640		431 kg 934 lbs	

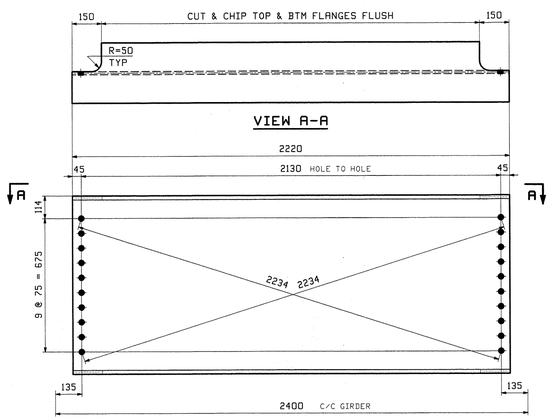

4 ~ END DIAPHRAGMS - 5D1 (NO PAINT)

4 ~ END DIAPHRAGMS - 5D1P (PAINTED - SEE DWG GN1)

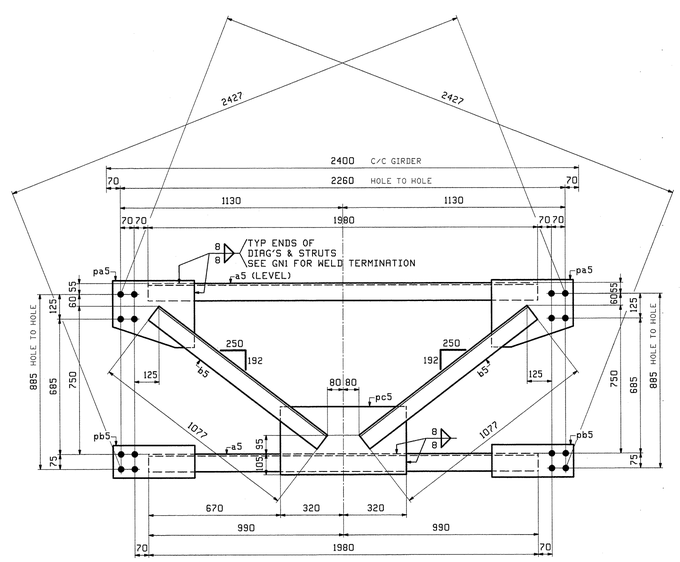

20 ~ INT. CROSSFRAMES - 5CF1

LOOKING UP-STATION

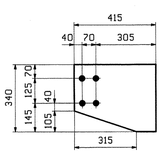

DETAIL - pa5

40 REQ'D

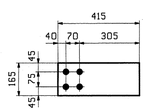

DETAIL - pb5

40 REQ'D

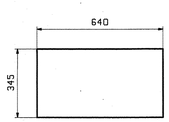

DETAIL - pc5

20 REQ'D

NOTE:

FOR GENERAL NOTES SEE DRAWING GN1.

REV.	DATE	REMARKS	DWN	CHK	APVL	SHOP
0					JUL 13 2012	

MATERIAL:	SURFACE PREP. & PAINT:	HOLES:	SHOP BOLTS:
M270M-345W	SEE DWG GN1	$\frac{15}{16}$"Ø	NONE

DESCRIPTION: DIAPHRAGMS & CROSSFRAMES

CASCO BAY STEEL STRUCTURES, INC.
1 WALLACE AVE. PHONE (207) 780-6722
SOUTH PORTLAND, ME 04106 FAX. (207) 780-6726
TENSOR PIZE

STRUCTURE: READSBORO
VT. ROUTE TH-2 OVER WEST BRANCH
OF DEERFIELD RIVER

DRAWN: JTB	DATE: 06/23	
CHK'D: WJL	DATE: 07/10	
LOCATION: READSBORO, VERMONT	JOB NO. 519	DWG NO. 5
PROJ NO. BRF 0105(3)		REV. △
CUSTOMER: RENAUD BROS.		

VTrans REVIEWED CHK'D JAG JUL 23 2012

Resident Eng. APPROVED DATE 7/17/12