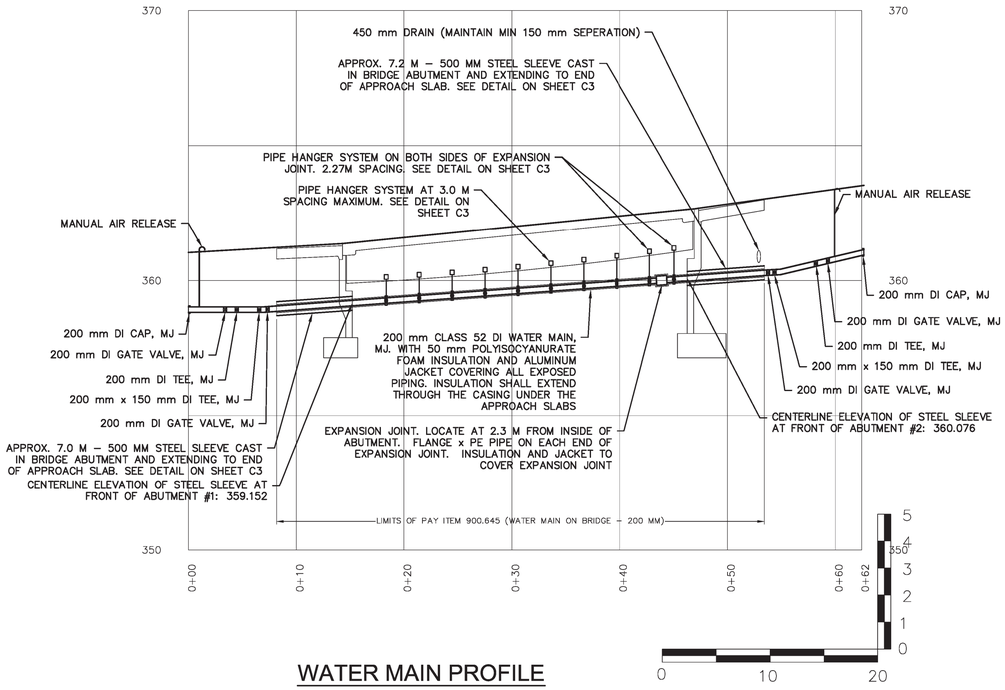

WATER MAIN PROFILE

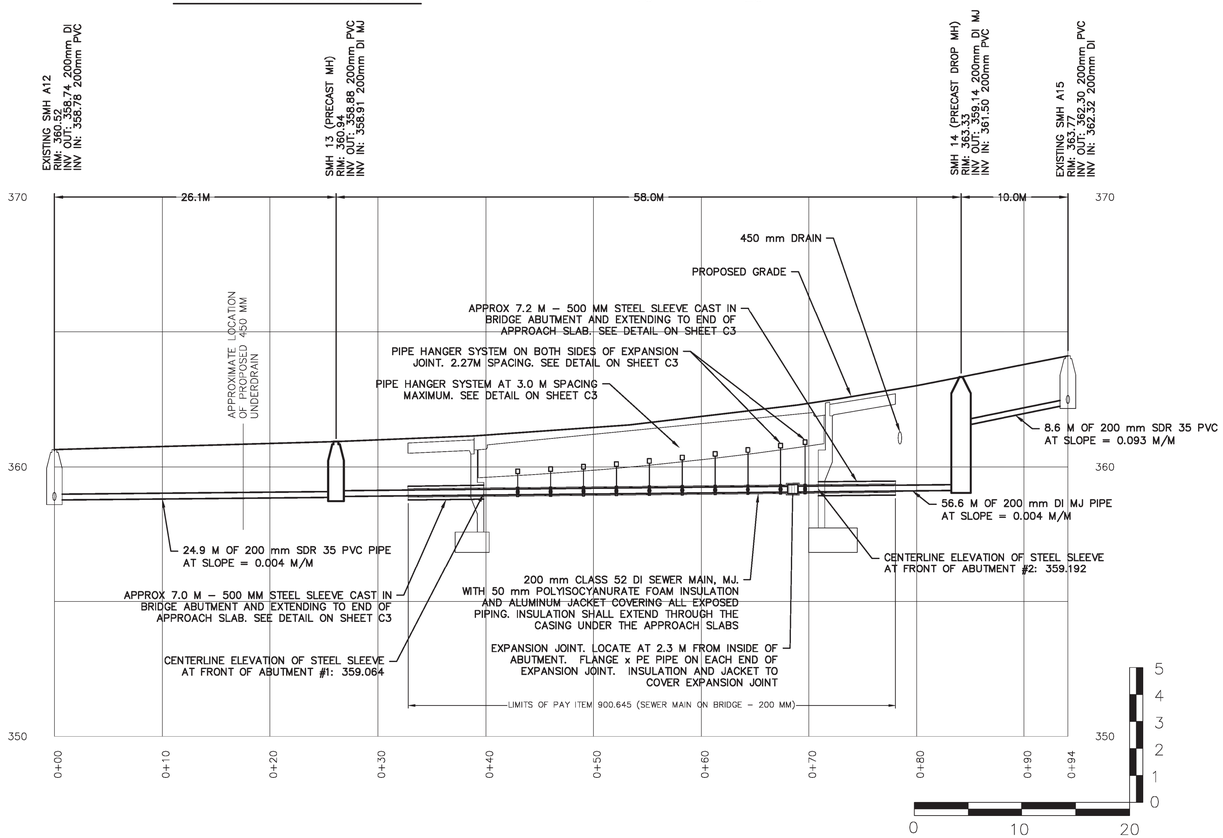

SEWER MAIN PROFILE

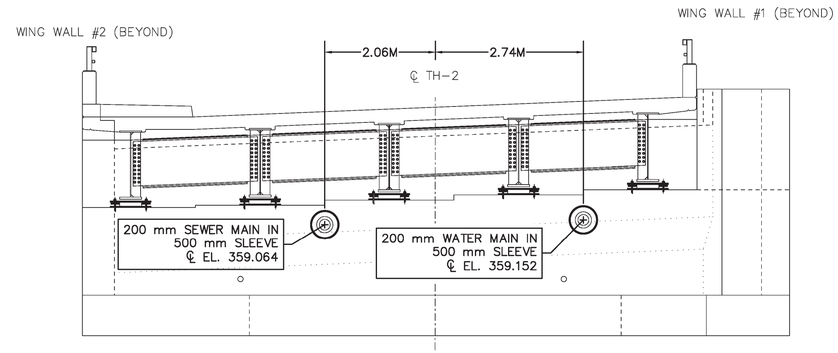

PIPE PENETRATIONS AT ABUTMENT #1

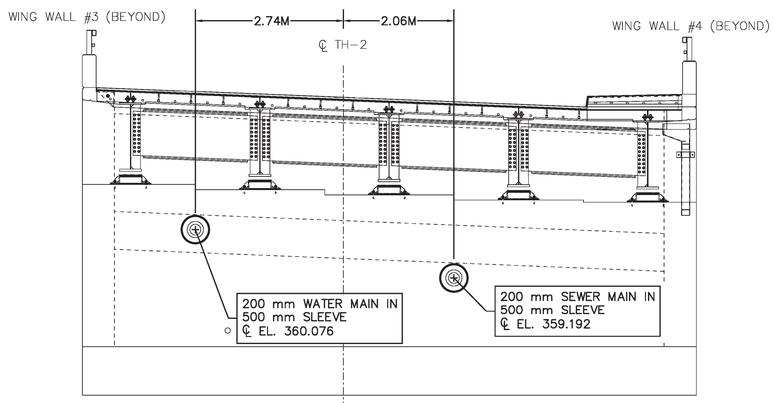

PIPE PENETRATIONS AT ABUTMENT #2

NOTES:

1. THE DIMENSIONS AND STATIONING SHOWN ON THIS DRAWING FOR BRIDGE SUPPORTS ARE APPROXIMATE AND MAY BE ALTERED ON THE BASIS OF APPROVED BRIDGE FABRICATION DRAWINGS. THE CONTRACTOR SHALL NOT FABRICATE THE BRIDGE CROSSING PIPING UNTIL APPROVED BRIDGE FABRICATION DRAWINGS ARE AVAILABLE.
2. THE FABRICATED PIPE SUPPORTS ATTACHED TO THE BRIDGE SHALL BE HOT DIPPED GALVANIZED AFTER COMPLETE FABRICATION. ALL HIGH STRENGTH BOLTS, NUTS AND WASHERS AS WELL AS THE PIPE SUPPORT AND SUPPORTING ELEMENTS SHALL BE ELECTROGALVANIZED UNLESS OTHERWISE NOTED.
3. THE PIPE LOCATED BETWEEN THE START OF EACH APPROACH SLAB SHALL BE INSULATED AND HAVE HEAT TRACING INSTALLED AFTER PLACEMENT.
4. REFER TO SHEET C3 FOR PIPE SUPPORT DETAILS. ALL BRIDGE CROSSING PIPE SHALL BE INSTALLED WITHOUT DEFLECTION OF JOINTS. CONTRACTOR SHALL INSTALL LATERAL AND VERTICAL RESTRAINT IF ANY PIPE JOINTS ARE DEFLECTED, AT THE CONTRACTOR'S EXPENSE. WORK IS SUBJECT TO THE WRITTEN PRE–APPROVAL OF AOT.
5. FLANGED EXPANSION JOINTS SHALL BE FURNISHED AND INSTALLED ADJACENT TO BRIDGE ABUTMENT #2 AS SHOWN ON THE DRAWING. THE EXPANSION JOINT SHALL HAVE A MINIMUM OF 100 mm (4 INCHES) OF AXIAL MOVEMENT.
6. PIPE FOR BRIDGE CROSSING SHALL BE CLASS 52, DUCTILE IRON WITH MEGALUG RETAINER GLANDS. EACH SECTION OF PIPE SHALL BE SUPPORTED BY AT LEAST TWO PIPE SUPPORTS. SUPPORTS SHALL BE INSTALLED WITHOUT CONFLICT BETWEEN PIPE JOINT AND SUPPORTS
7. ALL GATE VALVES MUST CONFORM TO THE TOWN OF READSBORO STANDARD AND OPEN LEFT (COUNTER CLOCKWISE).
8. PIPE SHALL BE SUPPORTED AT TWO POINTS ALONG EACH LENGTH OF PIPE. PIPE SHALL BE INSTALLED SUCH THAT THE PIPE SUPPORT IS 0.3 METERS FROM A PIPE JOINT, ON THE BELL SIDE OF THE JOINT, AND ANOTHER SUPPORT AT OR NEAR THE CENTER OF THE PIPE.
9. RIM ELEVATIONS SHOWN ON THIS PLAN MAY REQUIRE ADJUSTMENT BY THE CONTRACTOR AT NO ADDITIONAL COST TO MEET FINISH GRADE OF THE PROPOSED ROADWAY.
10. 900.645 SPECIAL PROVISION (WATER MAIN ON BRIDGE – 200MM) SHALL COVER ALL WORK BETWEEN THE ENDS OF THE STEEL SLEEVE, INCLUDING HEAT TRACING AND RELATED ELECTRICAL CONNECTIONS. ALL WORK OUTSIDE OF THESE LIMITS WILL BE PAID FOR UNDER THE APPROPRIATE INDIVIDUAL PAY ITEMS.
11. 900.645 SPECIAL PROVISION (SEWER MAIN ON BRIDGE – 200MM) SHALL COVER ALL WORK BETWEEN THE ENDS OF THE STEEL SLEEVE, INCLUDING HEAT TRACING AND RELATED ELECTRICAL CONNECTIONS. ALL WORK OUTSIDE OF THESE LIMITS WILL BE PAID FOR UNDER THE APPROPRIATE INDIVIDUAL PAY ITEMS.

FOR CONSTRUCTION

DUFRESNE GROUP
CONSULTING ENGINEERS
54 Main Street, P.O. Box B
Windsor, Vermont 05089
E-mail: dufresne@vermontel.net
Web: www.dufresnegroup.com
• • •
Windsor, VT • Tel: (802) 674-2904 Fax: (802) 674-2913
Barre, VT • Tel: (802) 479-3698 Fax: (802) 479-2261
St. Johnsbury, VT • Tel: (802) 748-8605 Fax: (802) 748-4512
• • •
Dufresne Group is owned by Dufresne & Associates, PC

STATE OF VERMONT
TIMOTHY P. KNAPP
NO. 50793
CIV
LICENSED PROFESSIONAL ENGINEER

REVISIONS

DATE	COMMENTS	BY

THIS DRAWING SHALL NOT BE REUSED OR ALTERED IN ANY WAY WITHOUT THE WRITTEN APPROVAL AND AUTHORITY OF DUFRESNE GROUP. ANY REVISIONS SHALL BE MADE BY DUFRESNE GROUP ©

TH 2, FAS 105
BRIDGE #32

WATER AND SEWER MAIN PROFILES

READSBORO, VERMONT

READSBORO BRF 0105(3)
WATER AND SEWER MAIN PROFILES
SHEET __ OF __

Project #	416006
Project Mgr.	NRJ
Design by	TPK
Drawn by	TPK
Reviewed by	NRJ
Approved by	NRJ
Date	MAY 2011
Scale	AS SHOWN

C2

FILE: P:\CADD Files\Woodstock VT\Bridge 32\416006-C2.dwg Dec 14, 2011 - 10:00am