Metric

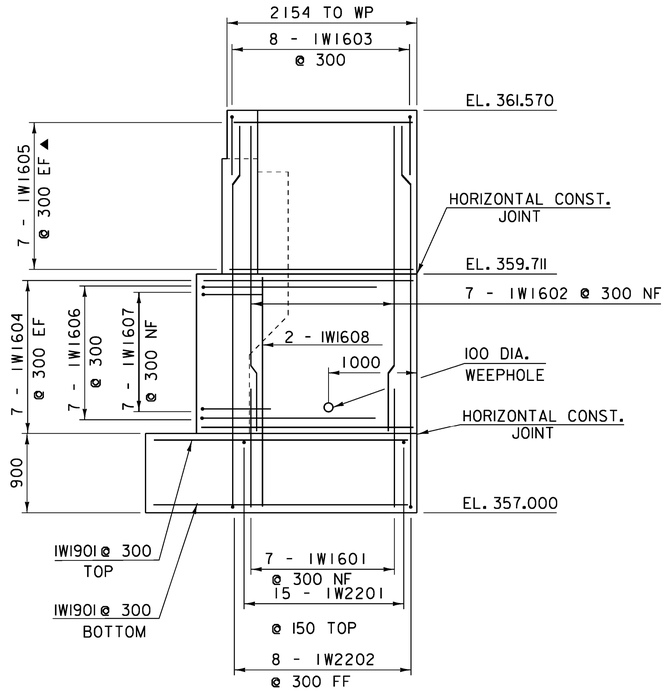

WINGWALL #1 ELEVATION

0 1 2 3 4

SCALE = 1:40

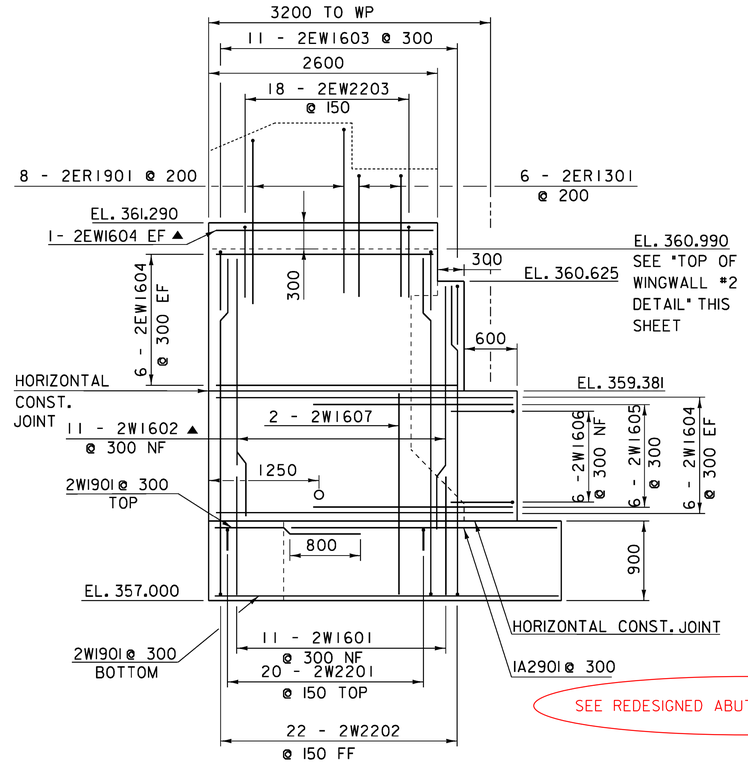

SEE REDESIGNED ABUTMENTS SHEET 3 OF 5

WINGWALL #2 ELEVATION

0 1 2 3 4

SCALE = 1:40

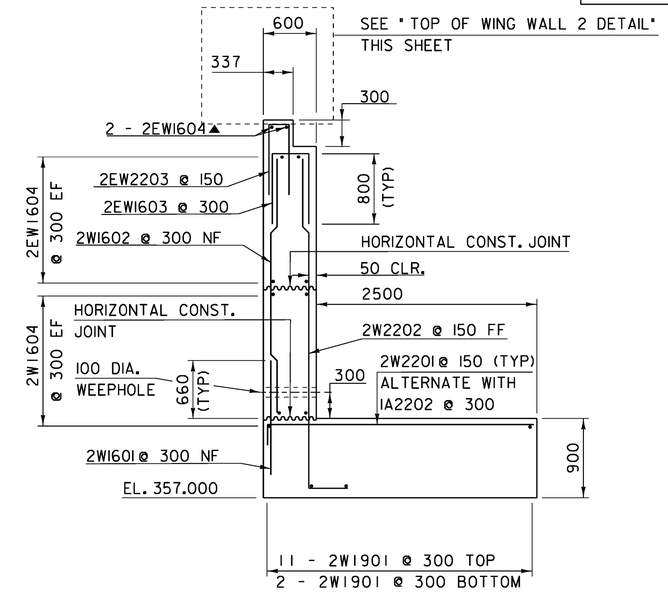

WINGWALL #2 TYPICAL

0 1 2 3 4

SCALE = 1:40

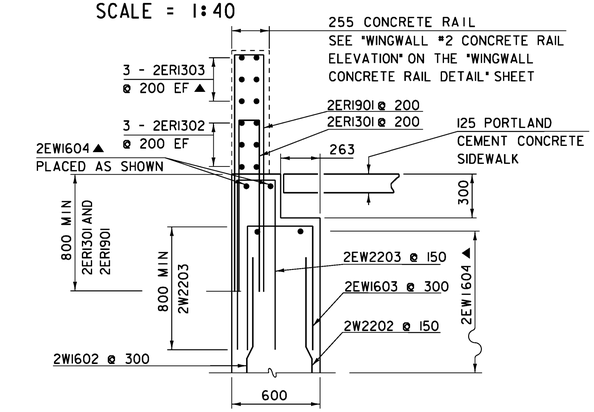

TOP OF WINGWALL #2 DETAIL

NTS

NF = NEAR FACE
FF = FAR FACE
EF = EACH FACE
▲ = CUT TO FIT IN FIELD

75 CLEAR, UNLESS OTHERWISE SPECIFIED ON THE PLANS

660 BAR LAP UNLESS OTHERWISE SPECIFIED ON THE PLANS

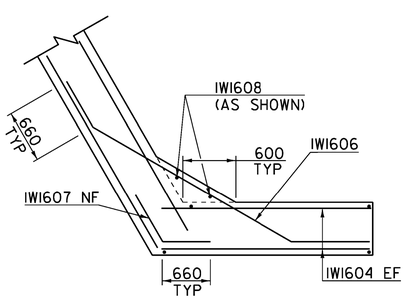

WINGWALL #1 CORNER DETAIL

(BELOW BRIDGE SEAT)

NTS

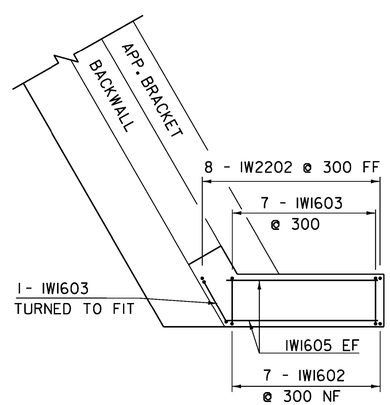

WINGWALL #1 CORNER DETAIL

(ABOVE BRIDGE SEAT)

NTS

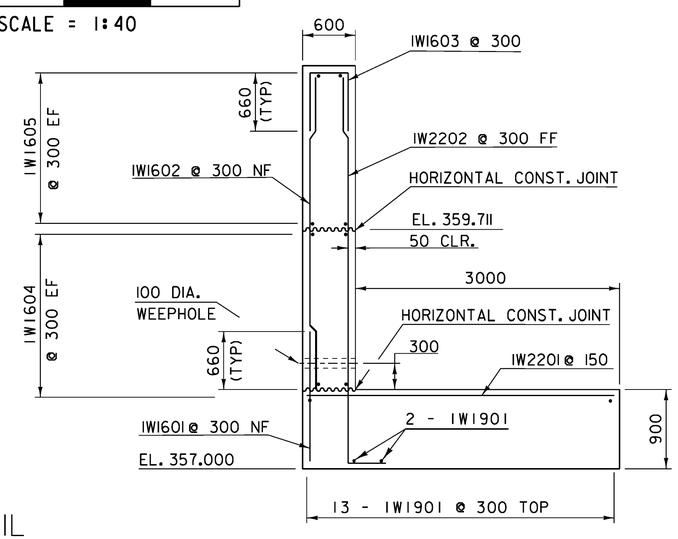

WINGWALL #1 TYPICAL

0 1 2 3 4

SCALE = 1:40

PROJECT NAME: READSBORO	
PROJECT NUMBER: BRF 0105 (3)	
FILE NAME: 89J088/STR/s89J088sub.dgn	PLOT DATE: 07-MAR-2012
PROJECT LEADER: J. LACROIX	DRAWN BY: G. ROKES
DESIGNED BY: W. PELLETIER	CHECKED BY: W. PELLETIER
WINGWALL 1 AND 2 DETAILS	SHEET 52 OF 90