Metric

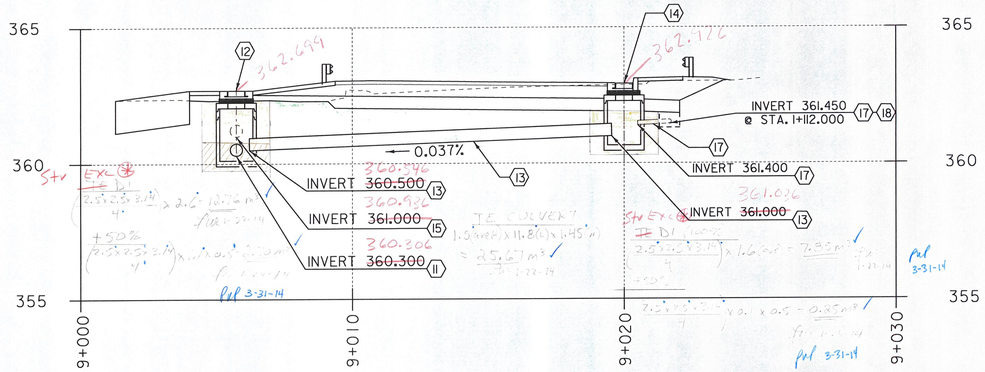


DRAINAGE PROFILE PIPE 13

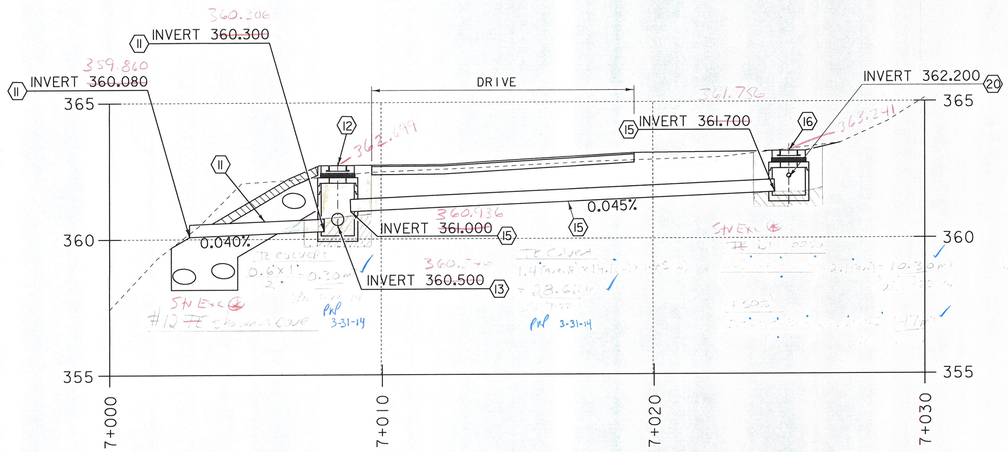


DRAINAGE PROFILE PIPES 11 AND 15

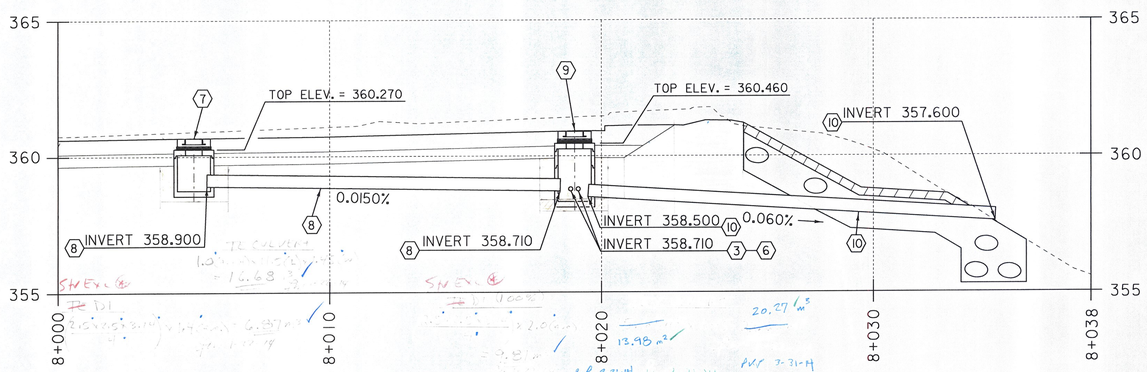


DRAINAGE PROFILE PIPES 8 AND 10

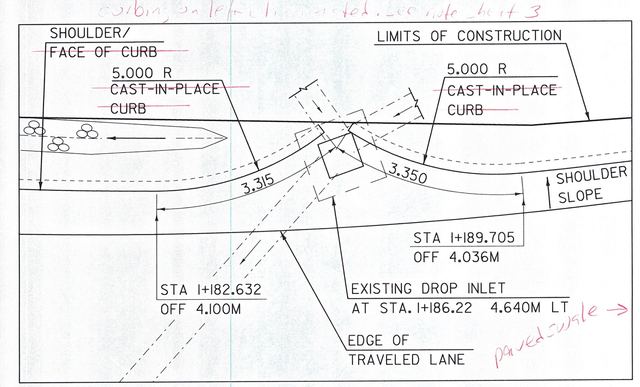


THE SHOULDER SLOPE SHALL BE EXTENDED BETWEEN THE ~~CAST-IN-PLACE CURBS~~ SO THAT ALL WATER IS DIRECTED TO THE EXISTING DROP INLET.

EXISTING DROP INLET CURBING DETAIL

NTS

~~(3) NEW CARRIER PIPE DIAMETER = 150mm~~

~~(6) NEW CARRIER PIPE DIAMETER = 150mm~~

(7) NEW PRECAST REINFORCED CONCRETE CATCH BASIN AT STA. 1+045.000 4.170M RT (TYPE E GRATE)

(8) NEW CPEP(SL)/~~CAAP/PCCSP~~ DIAMETER = 450mm LENGTH = 13.000M

(9) NEW PRECAST REINFORCED CONCRETE CATCH BASIN AT STA. 1+060.000 4.170M RT (TYPE E GRATE)

(10) NEW CPEP(SL)/~~CAAP/PCCSP~~ DIAMETER = 450mm LENGTH = 15.000M

(11) NEW CPEP(SL)/~~CAAP/PCCSP~~ DIAMETER = 450mm LENGTH = 5.000 M

(12) NEW PRECAST REINFORCED CONCRETE CATCH BASIN AT STA. 1+105.000 9.85M LT (TYPE E GRATE)

(13) NEW CPEP(SL)/~~CAAP/PCCSP~~ DIAMETER = 450mm LENGTH = 14.000M

(14) NEW PRECAST REINFORCED CONCRETE CATCH BASIN AT STA. 1+110.000 4.170M RT (TYPE E GRATE)

(15) NEW CPEP(SL)/~~CAAP/PCCSP~~ DIAMETER = 450mm LENGTH = 16.000M

(16) NEW PRECAST REINFORCED CONCRETE CATCH BASIN AT STA. 1+120.000 10.309M LT (TYPE E GRATE)

~~(17) NEW CARRIER PIPE DIAMETER = 150mm~~

~~(18) NEW UNDERDRAIN DIAMETER = 150mm~~

~~(20) NEW CARRIER PIPE DIAMETER = 150mm~~

For Underdrain
See Sheet 20

| | |
|---|---|
| PROJECT NAME: | READSBORO |
| PROJECT NUMBER: | BRF 0105 (3) |

| | |
|---|---|
| FILE NAME: 89J088/STR/sJ088xs.dgn | PLOT DATE: 07-MAR-2012 |
| PROJECT LEADER: J. LACROIX | DRAWN BY: G. ROKES |
| DESIGNED BY: W. PELLETIER | CHECKED BY: W. PELLETIER |
| DRAINAGE PROFILE SHEET | SHEET 22 OF 90 |